SHIGEMITSU

HEAVY DUTY HANDLING EQUIPMENT

WE SUPPLY COMPLETE WAREHOUSE SOLUTIONS

www.indotara.co.id

Central Ride Pallet Truck

SHIGEMITSU
マティアリアル ハンドリング イクィプメンツ

Model:
MP30Q

Heavy duty central rider pallet truck is widely used in supermarket & big warehouse.

Tow Tractors turn P94

AC EPS

Central Ride Pallet Truck

SHIGEMITSU
マティアリアル ハンドリング イクィプメンツ

Advantages:

- Advanced electric power steering (EPS), with flexible and comfortable steering, of autometic speed reduce function on turning, smart driving and controlling.
- Buffered stand-on platform, ergonomic backrest, for comfortable working.
- On and off warning lights option for secure.
- Easy & simple operation, making efficient work.
- With large capacity battery, side way structure to ensure the battery quick in and out.
- Powerful driving motor and control system, making the truck with strong momentum. Fully laden with 9Km/h maximum speed, fully laden with 10% climbing ability.
- Automatic back functioned German Frei handle.
- Professional appearance design of ergonomic, with comfortable driving, wide vision. Automatic off platform ensure security and reliability.
- Precisely adjusted function of length straight tappet against bending problems for overloading, vibration.
- Double steel entry rollers fitted forks, for smoothly moving into pallets.
- Lifting height up to 135mm/5.3inch.

1KG=2.205LB 1INCH=25.40MM

Model		MP30Q
Load capacity	**Q(kg/lbs)**	**3000/6600**
Load center	c(mm/inch)	600/23.6
Load distance, centre of drive axle to fork	x(mm/inch)	933/36.7
Tyre size, front	mm/inch	ϕ250x80/10x3.1
Tyre size, rear	mm/inch	ϕ82x173/3.2x6.8
Additional wheels (dimensions)	mm/inch	ϕ127x57/5x2.2
Wheels, number front rear(x=driven wheels)		1X+2/2
Height of tiller in drive position min./max.	h14(mm/inch)	1070/1370(42/54)
Fork height, lowered	h13(mm/inch)	82/3.2
Overall length	l1(mm/inch)	2570/101
Length to face of forks	l2(mm/inch)	1350/53
Overall width	b1(mm/inch)	823/32.4
Fork dimensions	S/e/l(mm/inch)	55x230x1220/2.2x9.1x48
Width overall forks	b5(mm/inch)	685/27
Aisle width for pallets 1000x1200 crossways	Ast(mm/inch)	2790/110
Aisle width for pallets 800x1200 lengthways	Ast(mm/inch)	2790/110
Turning radius	Wa(mm/inch)	2290/90
Travel speed, laden/unladen	Km/h	8/8.5
Battery voltage, nominal capacity K5	V/Ah	24/560
Battery weight	Kg/lbs	559/1232
Battery dimensions l/w/h	mm/inch	780X335X625/30.7x13.2x24.6
Service weight(with battery)	Kg/lbs	1150/2533

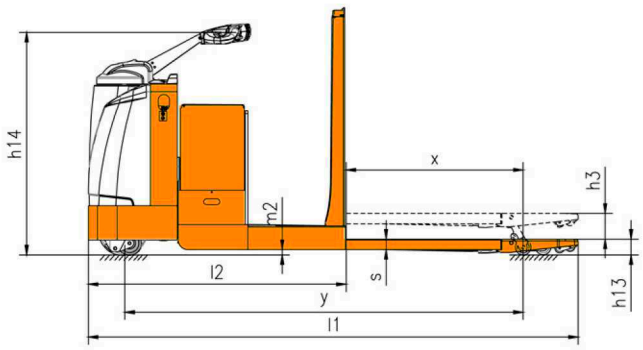

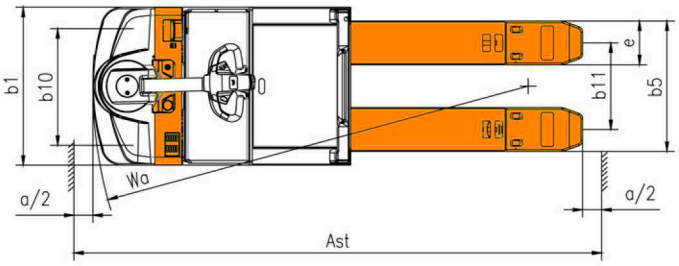

Counterbalanced Electric Reach Stacker

SHIGEMITSU
マティアリアル ハンドリング イクィプメンツ

Model:
KQD12W
KQD15W

Advantages:

STRUCTURAL

- Long handle structure makes it steering light and flexible.
- Two lifting cylinders placed on outer sides of the mast.
- Germany imported special steel mast.
- Vertical driving wheel, driving efficiency, easy installation & maintenance.
- Compact structure and low gravity.

SAFETY AND EFFICIENCY

- AC frequency conversion traction motor: compact structure, good performance, regenerative braking and easy maintenance.
- Tilting system forks easy for loading and stacking.
- High Storage battery ensures strong and long-lasting power.
- Meter with BDI, prolonging the battery's using time.
- The braking system combines magnetic brake and regenerative break, greatly prolongs the using life of friction plate.
- With emergency stop switch and electricity lock button, and multi-valve controlling levers, ergonomic for operation .
- The adjustable regulator valve can adjust the lowing speed of the masts.

EASY MAINTENANCE

- Magnet suction battery cover, easy for installation and maintenance.
- AC controlling system, low noise, less maintenance.

AC

TÜV SÜD CE

Conforms to EN ISO 3691-1:2012
EN1175-1/A1:2010

1KG=2.205LB 1INCH=25.40MM

Model		KQD12W	KQD15W
Load capacity	**Q(kg)**	**1250**	**1500**
Load center	c(mm)	500	500
Load distance	x(mm)	430	520
Tyre size, front	mm	Φ250x70	Φ250x70
Tyre size, rear	mm	Φ210x85	Φ210x85
Balance wheel size	mm	Φ127x57	Φ127x57
Wheels, number front rear(x = driven wheels)		1x+2/2	1x+2/2
Tread rear	b_{10}(mm)	908	908
Forks, tilt forward/back	°	3/6	3/6
Height, mast lowered	h_1(mm)	1820/2070/2320/1920/2080/2250/2420	1880/2118/2400/1953/2128/2298/2495
Free lift (option)	h_2(mm)	0 / 0 / 0 /1386/1550/1720/1886	0 / 0 / 0 /1280/1480/1600/1870
Max. lift height	**h_3(mm)**	**2500/3000/3500/4000/4500/5000/5500**	**2500/3000/3500/4000/4500/5000/5600**
Height, mast extended	h_4(mm)	3300/3800/4300/4800/5300/5800/6300	3500/4000/4500/5000/5500/6000/6600
Height of tiller in drive position min./max.	h_{14}(mm)	570/1320	570/1320
Overall length	l_1(mm)	2080	2130
Length to face of fork	l_2(mm)	1130	1180
Overall width	b_1(mm)	990	990
Fork dimension	s/e/l(mm)	35/100/950(1070/1150)	35/100/950(1070/1150)
Fork carriage width	b_3(mm)	220-680	220-680
Reach distance	l_3(mm)	560	650
Aisle width for pallets 800x1200 lengthways	A_{st}(mm)	2620	2720
Turning radius	W_a(mm)	1550	1680
Travel speed, laden/unlanden	Km/h	5.5/6	5.5/6
Lifting speed, laden/unlanden	m/s	0-0.13/0-0.2	0-0.13/0-0.2
Lowering speed, laden/unlanden	m/s	0--0.42/0--0.41(adjustable)	0--0.42/0--0.41(adjustable)
Battery voltage, nominal capacity K5	V/Ah	24/270	24/270
Battery weight	kg	260-320	260-320
Battery dimensions (l/W/H)	mm	825x213x590	825x213x590
Service weight(with battery)	kg	1700	1980

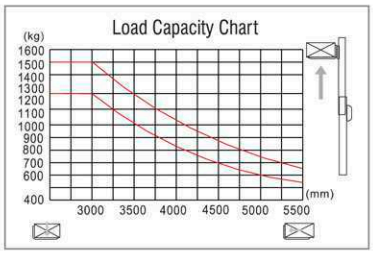

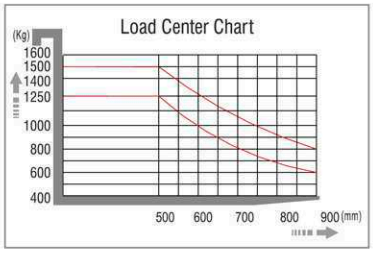

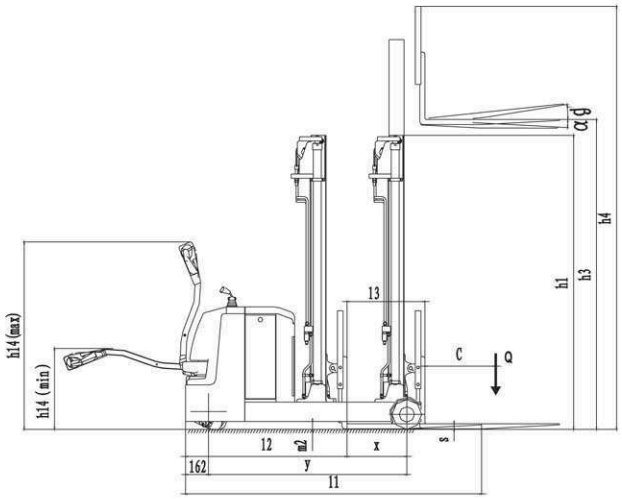

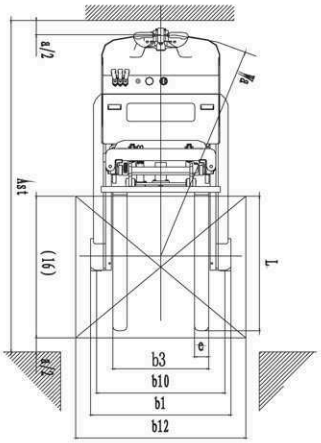

Counterbalanced Electric Reach Stacker

SHIGEMITSU
マティアリアル ハンドリング イクィプメンツ

Advantages:

STRUCTURAL

- Two lifting cylinders placed on outer sides of the mast.
- Germany imported special steel mast.
- Vertical driving wheel, driving efficiency, easy installation & maintenance.
- Compact structure and low gravity.

SAFETY AND EFFICIENCY

- AC frequency conversion traction motor: compact structure, good performance, regenerative braking and easy maintenance.
- Tilting system forks easy for loading and stacking.
- High Storage battery ensures strong and long-lasting power.
- Meter with BDI, prolonging the battery's using time.
- The braking system combines magnetic brake and regenerative break, greatly prolongs the using life of friction plate.
- With emergency stop switch and electricity lock button, and multi-valve controlling levers, ergonomic for operation .
- The adjustable regulator valve can adjust the lowing speed of the masts.

EASY MAINTENANCE

- Magnet suction battery cover, easy for installation and maintenance.
- AC controlling system, low noise, less maintenance.

Model:
KQD12R
KQD15R

AC

EPS
option

TÜV SÜD CE

Conforms to EN ISO 3691-1:2012
EN1175-1/A1:2010

1KG=2.205LB 1INCH=25.40MM

Model		KQD12R	KQD15R
Load capacity	**Q(kg)**	**1250**	**1500**
Load center	c(mm)	500	500
Load distance	x(mm)	430	520
Tyre size, front	mm	Φ250x70	φ250×70
Tyre size, rear	mm	Φ210x85	Φ210×85
Balance wheel size	mm	Φ150x60	Φ150×60
Wheels, number front rear(x = driven wheels)		1x+2/2	1x+2/2
Forks, tilt forward/back	°	3/6	3/6
Height, mast lowered	h_1(mm)	1820/2070/2320/1920/2080/2250/2420	1880/2118/2400/1953/2128/2298/2495
Free lift (option)	h_2(mm)	0 / 0 / 0 /1386/1550/1720/1886	0 / 0 / 0 /1280/1480/1600/1870
Max. lift height	**h_3(mm)**	**2500/3000/3500/4000/4500/5000/5500**	**2500/3000/3500/4000/4500/5000/5600**
Height, mast extended	h_4(mm)	3300/3800/4300/4800/5300/5800/6300	3500/4000/4500/5000/5500/6000/6600
Height of tiller in drive position min./max.	h_{14}(mm)	1160/1460	1160/1460
Overall length	l_1(mm)	2150	2250
Length to face of fork	l_2(mm)	1200	1200
Overall width	b_1(mm)	990	990
Fork dimension	s/e/l(mm)	35/100/950(1070/1150)	35/100/950(1070/1150)
Fork carriage width	b_3(mm)	220-680	220-680
Reach distance	l_3(mm)	560	650
Aisle width for pallets 800x1200 lengthways	A_{st}(mm)	2650	2750
Turning radius	W_a(mm)	1650	1750
Travel speed, laden/unlanden	Km/h	6.8/7	6.8/7
Lifting speed, laden/unlanden	m/s	0-0.13/0-0.2	0-0.13/0-0.2
Lowering speed, laden/unlanden	m/s	0--0.42/0--0.41(adjustable)	0--0.42/0--0.41(adjustable)
Battery voltage, nominal capacity K5	V/Ah	24/270	24/270
Battery weight	kg	260-320	260-320
Battery dimensions (l/W/H)	mm	825x213x590	825×213×590
Service weight(with battery)	kg	1800	2140

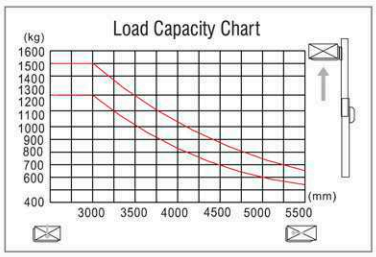

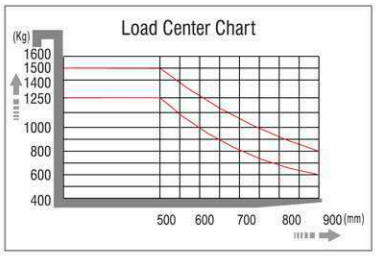

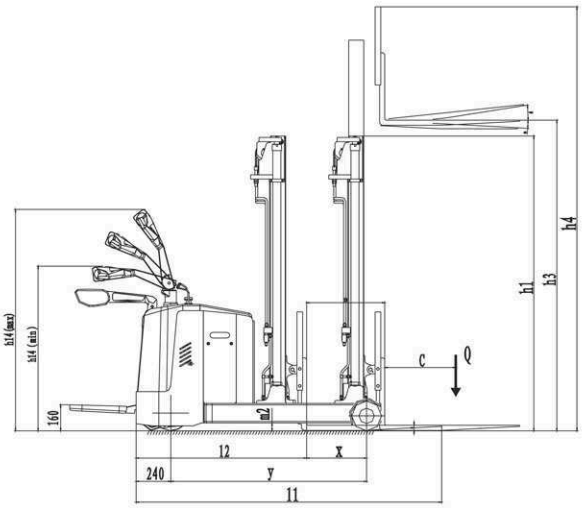

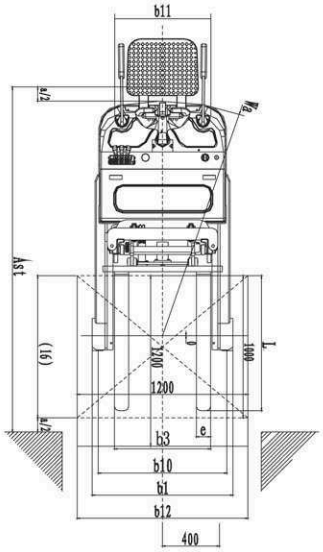

Counterbalanced Electric Stacker

SHIGEMITSU
マティアリアル ハンドリング イクィプメンツ

Advantages:

STRUCTURAL

- Long handle structure makes it steering light and flexible.
- Two lifting cylinders placed on outer sides of the mast.
- Germany imported special steel mast.
- Vertical driving wheel, driving efficiency, easy installation & maintenance.
- Compact structure and low gravity.

SAFETY AND EFFICIENCY

- AC frequency conversion traction motor: compact structure, good performance, regenerative braking and easy maintenance.
- Tilting system forks easy for loading and stacking.
- High Storage battery ensures strong and long-lasting power.
- Meter with BDI, prolonging the battery's using time.
- The braking system combines magnetic brake and regenerative break, greatly prolongs the using life of friction plate.
- With emergency stop switch and electricity lock button, and multi-valve controlling levers, ergonomic for operation .
- The adjustable regulator valve can adjust the lowing speed of the masts.

EASY MAINTENANCE

- Magnet suction battery cover, easy for installation and maintenance.
- AC controlling system, low noise, less maintenance.

Model: KPD15W

AC

1KG=2.205LB 1INCH=25.40MM

MODEL		KPD15W
Load capacity	**Q(kg)**	**1500**
Load center	c(mm)	500
Load distance	x(mm)	130
Tyre size, front	mm	Φ250×70
Tyre size, rear	mm	Φ200×100
Balance wheel dimension	mm	~
Wheels, number front rear(x = driven wheels)	mm	1x/2
Forks, tilt forward/back	°	3/6
Height, mast lowered	h_1(mm)	1735/1985/2235/1895/2085/2235/2435
Free lift (option)	h_2(mm)	0 / 0 / 0 /1400/1500/1670/1870
Max. lift height	**h_3(mm)**	**2500/3000/3500/4000/4500/5000/5600**
Height, mast extended	h_4(mm)	3509/4000/4500/5000/5500/6000/6600
Height of tiller in drive position min./max.	h_{14}(mm)	730/1360
Overall length	l_1(mm)	2650
Length to face of fork	l_2(mm)	1700
Overall width	b_1(mm)	990
Fork dimension	s/e/l(mm)	35/100/950(1070)
Width overall forks	b_3(mm)	220-680
Aisle width for pallets 800x1200 lengthways	A_{st}(mm)	3070
Turning radius	W_a(mm)	1570
Travel speed, laden /unlanden	Km/h	5.8/6
Lifting speed, laden /unlanden	m/s	0--0.12/0--0.19
Lowering speed, laden /unlanden	m/s	0--0.42/0--0.41
Battery voltage , nominal capacity K5	V/Ah	24/320
Battery weight	kg	300-360
Battery dimensions (l/W/H)	mm	812x270x620
Service weight(with battery)	kg	2080

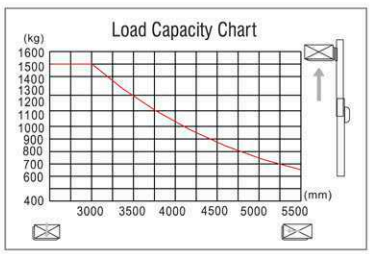

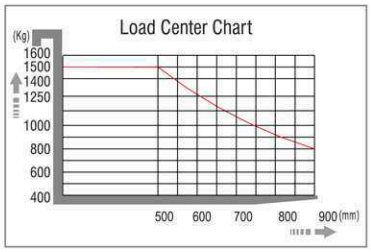

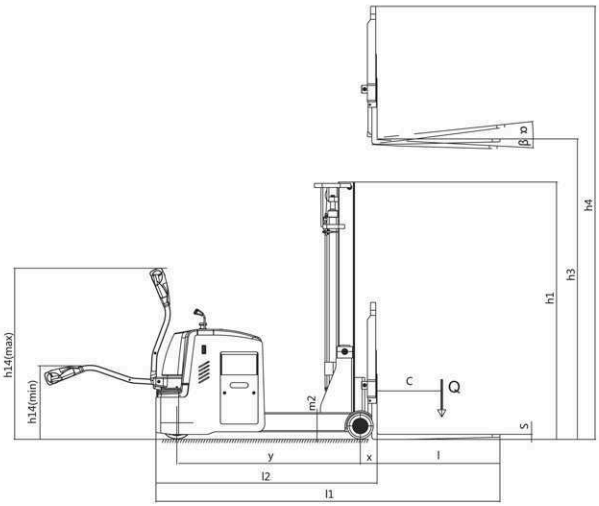

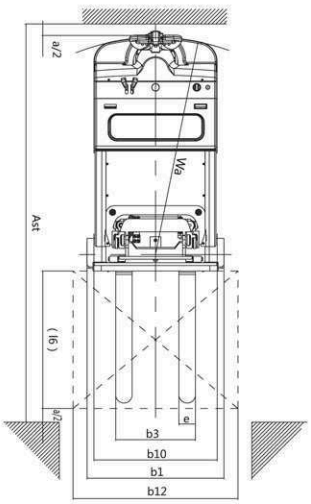

Counterbalanced Electric Stacker

SHIGEMITSU
マティアリアル ハンドリング イクィプメンツ

Model: KPD15R

AC

EPS
option

Advantages:

STRUCTURAL

- Two lifting cylinders placed on outer sides of the mast.
- Germany imported special steel mast.
- Vertical driving wheel, driving efficiency, easy installation & maintenance.
- Compact structure and low gravity.

SAFETY AND EFFICIENCY

- AC frequency conversion traction motor: compact structure, good performance, regenerative braking and easy maintenance.
- Tilting system forks easy for loading and stacking.
- High Storage battery ensures strong and long-lasting power.
- Meter with BDI, prolonging the battery's using time.
- The braking system combines magnetic brake and regenerative break, greatly prolongs the using life of friction plate.
- With emergency stop switch and electricity lock button, and multi-valve controlling levers, ergonomic for operation .
- The adjustable regulator valve can adjust the lowing speed of the masts.

EASY MAINTENANCE

- Magnet suction battery cover, easy for installation and maintenance.
- AC controlling system, low noise, less maintenance.

1KG=2.205LB 1INCH=25.40MM

MODEL		KPD15R(EPS)	KPD15R(EPS)
Load capacity	**Q(kg)**	**1500**	**1500**
Load center	c(mm)	500	500
Load distance	x(mm)	130	130
Tyre size, front	mm	Φ280×100	Φ250×70
Tyre size, rear	mm	Φ200×100	Φ200×100
Balance wheel dimension	mm	~	Φ150×60
Wheels, number front rear(x = driven wheels)	mm	1x/2	1x+2/2
Forks, tilt forward/back	°	3/6	3/6
Height, mast lowered	h_1(mm)	1735/1985/2235/1895/2085/2235/2435	1735/1985/2235/1895/2085/2235/2435
Free lift (option)	h_2(mm)	0 / 0 / 0 /1400/1500/1670/1870	0 / 0 / 0 /1400/1500/1670/1870
Max. lift height	**h_3(mm)**	**2500/3000/3500/4000/4500/5000/5600**	**2500/3000/3500/4000/4500/5000/5600**
Height, mast extended	h_4(mm)	3500/4000/4500/5000/5500/6000/6600	3500/4000/4500/5000/5500/6000/6600
Height of tiller in drive position min./max.	h_{14}(mm)	1160/1460	1160/1460
Overall length	l_1(mm)	2660	2660
Length to face of fork	l_2(mm)	1700	1700
Overall width	b_1(mm)	990	990
Fork dimension	s/e/l(mm)	35/100/950(1070)	35/100/950(1070)
Width overall forks	b_3(mm)	220-680	220-680
Aisle width for pallets 800x1200 lengthways	A_{st}(mm)	3120	3120
Turning radius	W_a(mm)	1600	1600
Travel speed, laden /unlanden	Km/h	6.8/7	6.8/7
Lifting speed, laden /unlanden	m/s	0--0.12/0--0.19	0--0.12/0--0.19
Lowering speed, laden /unlanden	m/s	0--0.42/0--0.41	0--0.42/0--0.41
Battery voltage , nominal capacity K5	V/Ah	24/320	24/320
Battery weight	kg	300-360	300-360
Battery dimensions (l/W/H)	mm	812x270x620	812x270x620
Service weight(with battery)	kg	2030	2030

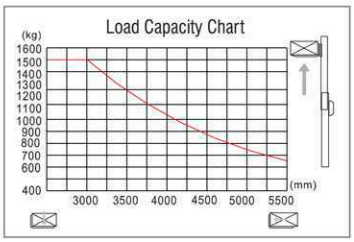

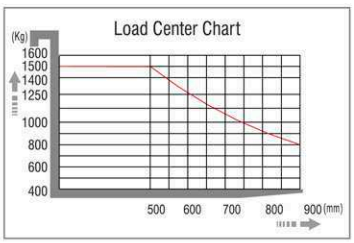

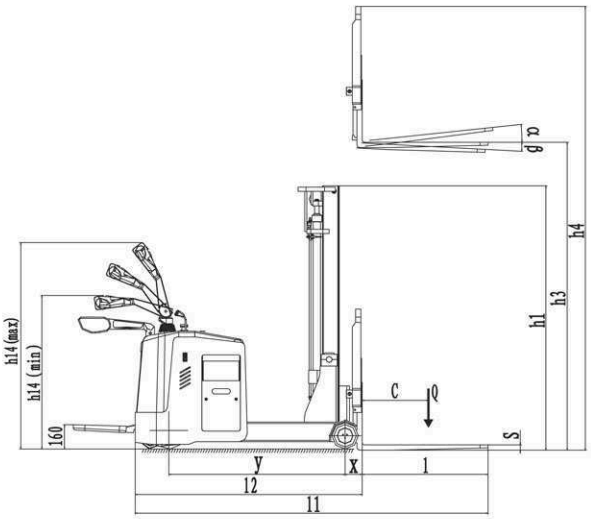

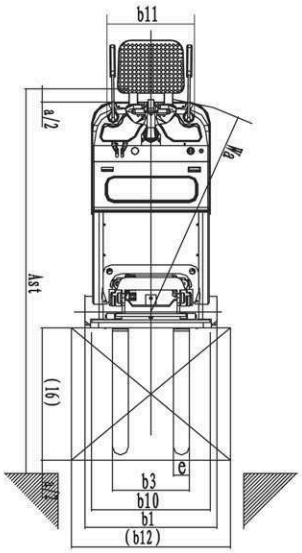

Double-pallet Electric Stacker

SHIGEMITSU
マティアリアル ハンドリング イクィプメンツ

Model: KDR15S

This heavy stacker includes two models with a rated load capacity of 1500kgs. Specifically designed for intensive stocking operations at medium height warehouse. 2000kgs load can be transported using the initial lift function.

Advantages:

- The 4- points support structure with side tiller, low center of gravity design with excellent stability.
- Double pallet design: two pallet handled at one time, initial lift of load leg increases ground clearance to negotiate easily ramps, dock levelers and bridging plates.
- Vertical driving wheel, offer small turning radius, dustproof waterproof motor, easy for maintenance.
- Ac motor without carbon brush, good ramp braking performance, efficient electromagnetic parking brake.
- Free lifting mast with two side cylinders offers wide view for operators.

Conforms to EN 1726-1/ A1:2003
Based on Directive 2006/42/EC

AC

Model: KDK15S

Double-pallet Electric Stacker

SHIGEMITSU
マティアリアル ハンドリング イクィプメンツ

1KG=2.205LB 1INCH=25.40MM

Model		KDK15S		KDR15S	
Load capacity/rated load	**Q(kg)**	**1500**	**1500**	**1500**	**1500**
Load centre distance	c(mm)	600	600	600	600
Load distance, centre of drive axle to fork	x(mm)	768	768	697	697
Tyre size, front	mm	Φ250X70	Φ250X70	ϕ250×70	ϕ250×70
Tyre size, rear	mm	Φ80X70	Φ80X70	ϕ80×70	ϕ80×70
Additional wheels(dimensions)	mm	Φ150X47	Φ150X47	ϕ150×60	ϕ150×60
Wheels, number front rear(x=driven wheels)		1x+1/4	1x+1/4	1x+1/4	1x+1/4
Height, mast lowered	h_1(mm)	1757/2007/2157/2257	2022/2182/2382	1757/2007/2157/2257	2022/2182/2382
Free lift	h_2(mm)	1300/1550/1700/1800	1570/1740/1940	1300/1550/1700/1800	1570/1740/1940
Max. lift height	**h_3(mm)**	**2500/3000/3300/3500**	**4500/5000/5600**	**2500/3000/3300/3500**	**4500/5000/5600**
Initial lift	h_5(mm)	120	120	120	120
Overall length	l_1(mm)	2058	2058	1982	1982
Length to face of forks	l_2(mm)	988	988	878	878
Overall width	b_1(mm)	850	850	820	820
Fork dimensions	s/e/l(mm)	60/180/1070(1150)	60/180/1070(1150)	60/180/1070(1150)	60/180/1070(1150)
Width overall forks	b_5(mm)	570/650	570/650	570/650	570/650
Aisle width for pallets 800x1200 lengthways	A_{st}(mm)	2575	2575	2500	2500
Turning radius	W_a(mm)	1786	1786	1660	1660
Travel speed, laden/unladen	Km/h	6.2/6.5	6.2/6.5	5.8/6	5.8/6
Lift speed, laden/unladen	m/s	0.11/0.14	0.11/0.14	0.11/0.14	0.11/0.14
Lowering speed, laden/unladen	m/s	0.12/0.12	0.12/0.12	0.12/0.12	0.12/0.12
Battery voltage, nominal capacity K_5	V/Ah	24/240	24/300	24/240	24/240
Battery weight	kg	220	260	220	220
Battery dimensions l/w/h	mm	675X254X500	675X254X500	675×254×500	675×254×500
Service weight(with battery)	kg	1260	1260	1205	1205

1. With initial lift.
2. Calculated with height 3000mm, fork 1070mm.

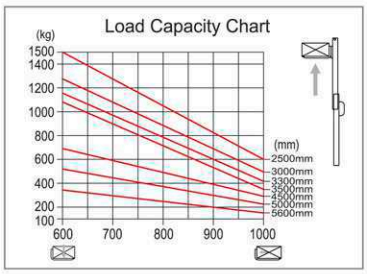

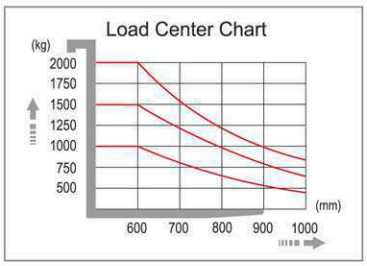

KDK15S

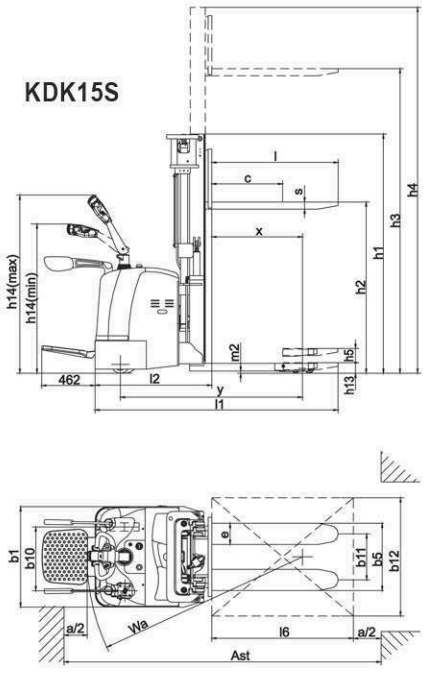

KDR15S

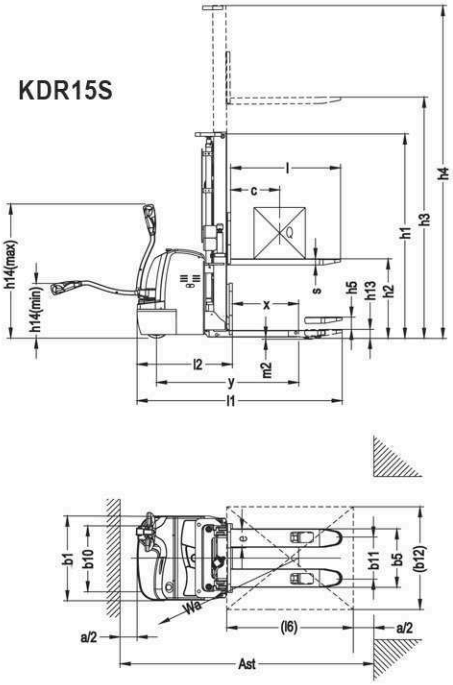

Double Scissors Lift Table

SHIGEMITSU
マティアリアル ハンドリング イクィプメンツ

Model: **TRS150**
TRS350

Model: **TRF680**

Model: **TRS800**

Conforms to EN 1570-4:1998+A2
Based on Directive 2006/42/EC

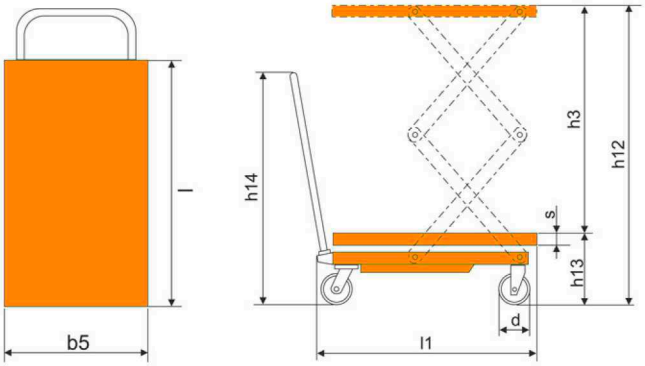

1KG=2.205LB 1INCH=25.40MM

Model		TRS150	TRS350	TRS800	TRF680	TRT500/TRTJ500
Capacity	kg	150	350	800	680	500
Max. lift height	h_{12} (mm)	1100	1300	1500	1500	900
Min. height of table	h_{13} (mm)	302	350	475	474	310
Lifting height	h_3 (mm)	798	950	1025	1026	590
Table size	lxb5xs (mm)	700x450x35	910x500x50	1220x610x60	1220x610x55	1600x800x50
Total height	h_{14}(mm)	921	970	962	1038	970
Overall length	l_1 (mm)	773	980	1375	1289	1670
Foot pedal cycles to max height		≤30	≤60	≤70	35/80	≤55
Wheel diameter	d (mm)	100	127	150	150	127
Service weight	kg	64	105	172	170	136
Carton size	mm	800x480x330	1010x530x390	1400x730x500	1320x630x480	1700x810x330

Drum Lifter

SHIGEMITSU
マティアリアル ハンドリング イクィプメンツ

Model: **STMD-35**

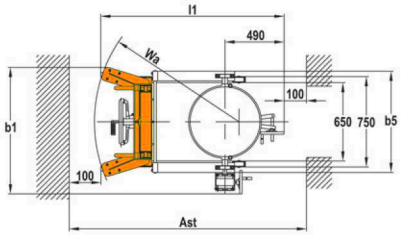

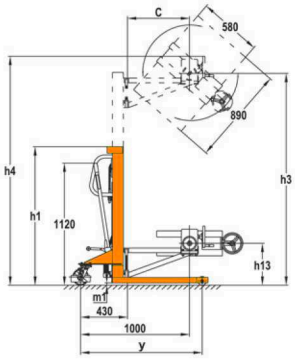

Drum Stacker

1KG=2.205LB 1INCH=25.40MM

Model		STMD-35
Capacity	Q(kg)	350
Load centre distance	c(mm)	570
Wheelbase	y(mm)	1115
Tyre size, front	(mm)	ϕ 80x36
Tyre size rear	(mm)	ϕ 147x40
Height, mast lowered	h_1(mm)	1270/1490
Max. lift height	h_3(mm)	1945/2385
Height, mast extended	h_4(mm)	2100/2640
Lowered fork height	h_{13}(mm)	385
Overall length	l_1(mm)	1520
Overall width	b_1(mm)	1050
Width overall forks	b_5(mm)	840
Ground clearance, laden, below mast	m_1(mm)	22
Turning radius	W_a(mm)	1200
Lowering speed, laden/unladen	mm/s	manual control
Service weight	kg	235

Drum Loader

Model: **DL08**

Max.Height of Drum: 957mm
Min.Height of Drum: 832mm
Drum Dia: 580mm

- Easily and quickly lift drums without hydraulic or electric connections.

Model: **DL08**
Cap. :300kg

Model: **DL16**
Cap. : 300kg

Model: **DL32**
Cap. : 300kg

Model: **DL64**
Cap. : 300kg

Electric Fork Reach Truck

SHIGEMITSU
マティアリアル ハンドリング イクィプメンツ

Model:
NQH15C

Hot Sale

AC

EPS
Option

Advantages:

SAFETY AND STABILITY

- Advanced AC control system eliminating the motor brushes and directional contactor, which makes the minimal maintenance requirements.
- Stepless speed control Intelligentized regenerative brake system: increase overall truck performance by decreasing battery charge intervals.
- Equipped with adjustable hand-rest, adapted to different operator.
- Multi-function display: battery status, hour meter, fault indicator etc.
- Two sides-way battery with roll-out system is very convenient to replace batteries.
- Damping cushion for low-noise operation.
- Built-in pressure relief valve protects the trucks from overloads.
- Emergency power disconnect.

STRUCTURAL

- Low Center of Gravity ensures the stable operation.
- Vertical driving wheel has a small turning radius and easy to maintain. The motor structure is water-proof and dust-proof.
- The Scissor Reach Forks is operated by electric controller, which makes operation stable and no impact.

SERVICEABILITY

- Low battery protection setting prolongs the battery use time.
- CANbus technology reduces wiring complexity and increase reliability.
- All pivot points have grease fitting and serviceable bushing, reducing component wear and extending component life.
- The back cover is easy to open for maintenance and adjustment of parts of valve, oil tube and electronic parts.

Option:

- Straddle legs
- Double front wheels
- Side shift
- Double scissors
- Full free lift masts

Vertically mounted drive motor with CANbus technology reduces wiring complexity and increase reliability.

Large cab with dead man power off switch, Multi-function display: battery state, hour meter, fault indicator etc.

The optional of double scissors forks.

Side battery with roll-out system convenient to replace batteries. The battery upside cover makes you easy to fill the battery.

Electric Reach Truck

SHIGEMITSU
マティアリアル ハンドリング イクィプメンツ

Model		NQH15C (Single Scissor)							NQH15C (Double Scissor)						
Drive type		battery				battery			battery			battery			
Load capacity/Rated load	**Q(kg)**	**1500**				**1500**			**1000**			**1000**			
Load centre distance	c(mm)	500				500			500			500			
Load distance, centre of drive axle fork	x(mm)	450				450			450			450			
Tyre size, front	mm	280x100+160x55				280x100+160x55			280x100+160x55			280x100+160x55			
Tyre size, rear	mm	125x82(4)				125x82(4)			125x82(4)			125x82(4)			
Wheels, number front rear(x=driven wheels)		1+2				1+2			1+2			1+2			
Tilt of mast/fork carriage forward/backward)	Grad	2/5				2/5			2/5			2/5			
Height, mast lowered	h_1(mm)	2140	2390	2640	2200	2360	2520	2700	2140	2390	2640	2200	2360	2520	2700
Free lift	h_2(mm)	~	~	~	1575	1700	1825	2000	~	~	~	1575	1700	1825	2000
Max. lift height	**h_3(mm)**	**3000**	**3500**	**4000**	**4500**	**5000**	**5500**	**6000**	**3000**	**3500**	**4000**	**4500**	**5000**	**5500**	**6000**
Height, mast extended	h_4(mm)	4070	4570	5070	5570	6070	6570	7070	4070	4570	5070	4070	6070	6570	7070
Overall width	b_1/b_2(mm)	1308/1040	1308/1040	1308/1040	1308/1040	1308/1040	1308/1040	1370/1040	1308/1040	1308/1040	1308/1040	1308/1040	1308/1040	1308/1040	1370/1040
Overall length	l_1(mm)	2395				2415			2395			2415			
Length to face of forks	l_2(mm)	1170				1170			1170			1170			
Fork Dimension	s/e/l(mm)	35/100/1070				35/100/1070			35/100/1070			35/100/1070			
Reach distance	l_4(mm)	500				500			1200			1200			
Fork height, lowered	h_6(mm)	130				130			130			130			
Distance of "X" (see below diagram)	mm	450				450			350			350			
Overall length (excluding the fork)	mm	1868				1868			1868			1868			
Ground clearance, centre of wheelbase	m_2(mm)	65				65			65			65			
Aisle width for pallets 1000x1200 crossways	A_{st}(mm)	2900				2930			3070			3100			
Aisle width for pallets 800x1200 lengthways	A_{st}(mm)	2900				2930			3070			3100			
Turning radius	W_a(mm)	1715				1735			1715			1735			
Travel speed, laden/unladen	Km/h	6.5/6				6.5/6			6.5/6			6.5/6			
Lift speed, laden/unladen	m/s	0.15/0.18				0.16/0.18			0.14/0.17			0.13/0.16			
Lowering speed, laden/unladen	m/s	0.25/0.2				0.28/0.2			0.28/0.2			0.28/0.23			
Battery voltage, nominal capacity K5	V/Ah	24/420(560)				24/420(560)			24/420(560)			24/420(560)			
Battery weight	kg	345				345			345			345			
Battery dimension l/w/h	mm	770x336X610				770x336x610			770x336X610			770x336x610			
Service weight (with battery)	kg	2250	2300	2360	2500	2600	2700	2980	2250	2300	2360	2500	2600	2800	2980

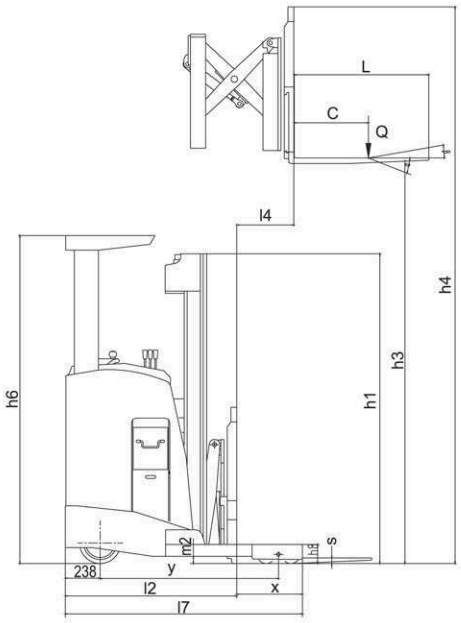

DIMENSIONS

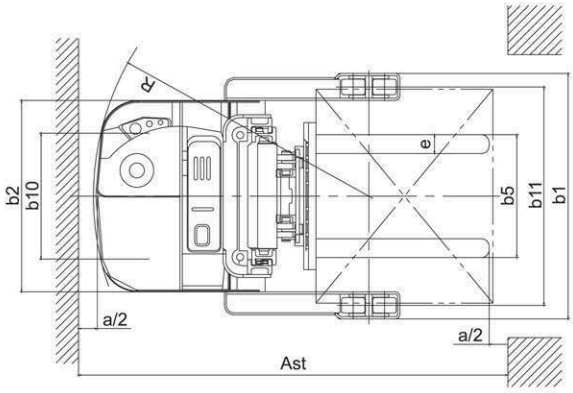

Electric High Level Order Picker

SHIGEMITSU
マティアリアル ハンドリング イクィプメンツ

Model:
KOP15

Electric high lever order picker provides safety and high efficiency order picking for high racked warehouse.

Max. lift height:
9000mm

AC

Electric High Level Order Picker

SHIGEMITSU
マティアリアル ハンドリング イクィプメンツ

Advantages:

- Low gravity centre provides good stability.
- Advanced electric steering technology(EPS) is humanized designed, with automatic reset , height display and automatic deceleration at high lifting lever .
- Finger tip control via joystick, Stepless speed control for driving, lifting and lowering speed is adjustable.
- Buffer oil cylinder: the oil cylinder will automatic decelerate when off ground 500mm, to prevent impact and lower noises.
- The mast and the frame are dividable and exchangeable.
- Low battery protection setting prolongs the battery use time.
- AC motor eliminates replacement of the carbon brush, provides good ramp starting performance and regenerative breaking functions.
- Sideway battery is convenient for exchanging and maintaining.
- The mast material is the special type imported from Germany.
- The truck can automatic decelerate when quick turning.
- High performance multi-function instrument has LED light and display function. LED indicators include battery indicator, fault indicator, Electric thermometer indicator, pedal indicator and hand break indicator.
- Multi function display, include battery status, performance, working hour, accelerator, speed, the wheel position and traveling direction.
- Press right and left keys to switch for different grades: high, normal, low, and lowest.

Pallet Lock device

Steering and speed adjusting device

Light and fan

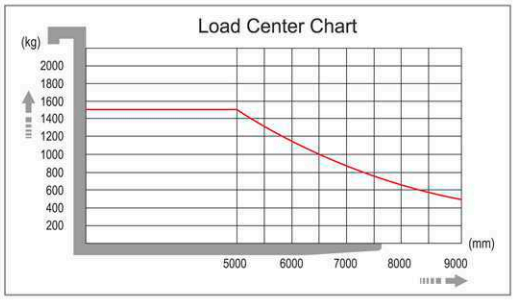

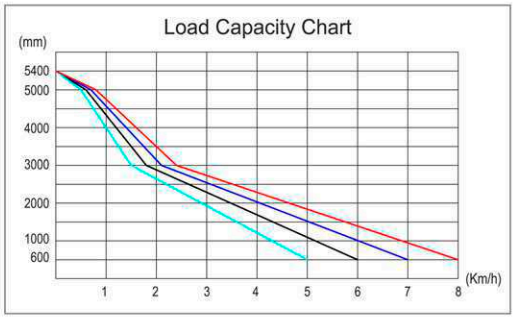

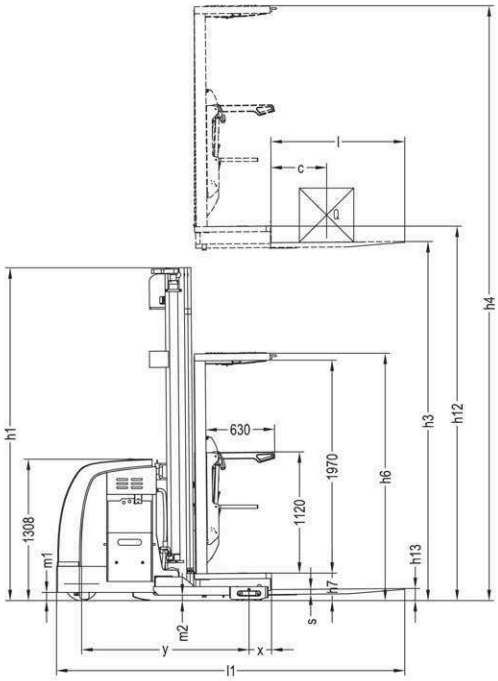

1KG=2.205LB 1INCH=25.40MM

Model		KOP15
Drive type		Battery
Load capacity/rated load	**Q(kg)**	**1500**
Load centre distance	c(mm)	600
Load distance, centre of drive axle to fork	x(mm)	206
Tyre size, front	mm	ϕ310x125
Tyre size, rear	mm	ϕ128x73
Aditional wheel	mm	ϕ150x47
Wheels, number front rear (x=driven wheels)		1x+2/4
Height, mast lowered	h_1(mm)	2410/3080/3750
Max. lift height	**h_3(mm)**	**5000/7000/9000**
Height , mast extended	h_4(mm)	7230/9230/11230
Height of platform	h_7(mm)	230
Lowed height	h_{13}(mm)	80
Overall length	l_1(mm)	3200
Coupling height	l_2(mm)	1975
Overall width	b_1/b_2(mm)	1100/1352
Forks length	s/e/l(mm)	45/100/1220
Width overall forks	b_3(mm)	530/715
Height of overhead guard	h_6(mm)	2290
Aisle width for pallets 1000x1200 crossways	A_{st}(mm)	1400
Aisle width for pallets 800x1200 lengthways	A_{st}(mm)	1400
Turning radius	W_a(mm)	1800
Travel speed, laden/unladen	Km/h	7.7/8
Lift speed, laden/unladen	m/s	0—0.15/0—0.28
Lowering speed, laden/unladen	m/s	0—0.28/0—0.3
Battery voltage, nominal capacity K5	V/Ah	24/770(1100)
Battery weight	kg	610(850)
Battery dimensions L/w/h	mm	982x397x561
Service weight (with battery)	kg	3870

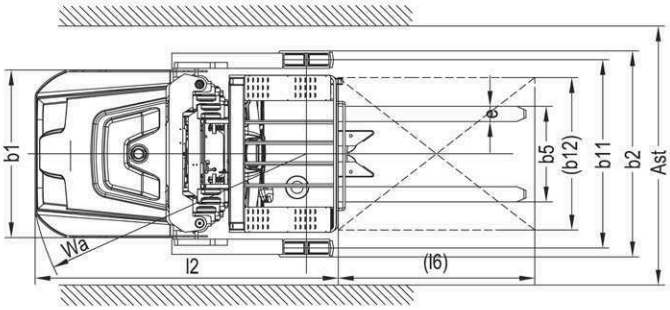

Electric High Lift Truck

SHIGEMITSU
マティアリアル ハンドリング イクィプメンツ

Conforms to EN 1757-4:2003
Based on Directive 2006/42/EC

Model: **PKD8**

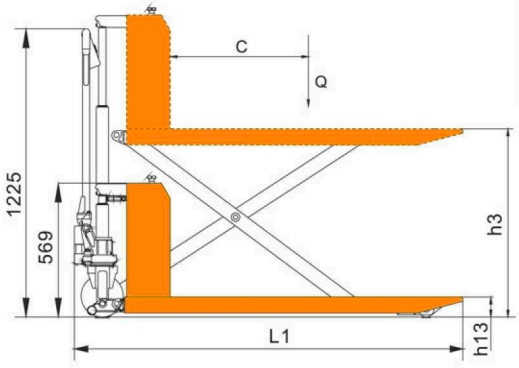

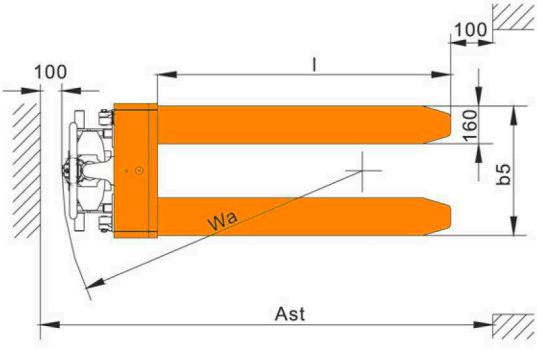

1KG=2.205LB 1INCH=25.40MM

Model		PKD8
Capacity	Q(kg)	1000
Lowered fork height	h_{13}(mm)	85
Steering wheel	mm	Φ180x50
Fork wheel	mm	Φ74x50
Max. lift height	h_3(mm)	800
Overall length	L_1(mm)	1652
Fork length	l (mm)	1245
Width overall forks	b_5(mm)	550/685
Aisle width for pallets 1000x1200 crossways	A_{st}(mm)	1852
Aisle width for pallets 800x1200 lengthways	A_{st}(mm)	1852
Turning radius	W_a(mm)	1480
Lift motor rating at S3 15%	kW	0.7
Battery voltage,nominal capacity K10	V/Ah	12/100
Battery weight	kg	31
Service weight (with battery)	kg	181

Electric Narrow Aisle Stacker With Crane

SHIGEMITSU
マティアリアル ハンドリング イクィプメンツ

Model: KDRM

Advantages:

STRUCTURE AND SAFETY

- Vertical driving wheel has excellent performance and stable quality
- USA AC control system with sensitive reaction and low noise
- Germany imported handle assembly is stable and flexible to operate.
- Germany imported mast U-steel is safety and durable.
- Balance weight in the rear, no fixed straddle legs in the front.
  a) The forks can enter into the bottom of cargos which has small clearances from the ground.
  b) Very easily to operate at any open space to stack goods.

EASY MAINTENANCE

- power display instrument has low voltage alarm lamp.
- It adopts imported AC driving motor: compact structure, good performance, regenerative braking and easy maintenance.
- Use large capacity battery which provides strong and long lasting power
- Sideway moving battery which is convenient for charging and maintenance
- With BDI and BDI/Interrupt to protect the battery , to prolong the battery's use time.
- Sideshift and forks available.

1KG=2.205LB 1INCH=25.40MM

Model		KDRM-05	KDRM-10
Load capacity/rated load	**Q(kg)**	**500**	**1000**
Load centre distance	c(mm)	190	190
Load distance,centre of drive axle to fork	Y(mm)	1365	1365
Tyre size, front	(mm)	ϕ250x70	ϕ250x70
Tyre size, rear	(mm)	ϕ250x80	ϕ250x80
Additional wheels(dimensions)	(mm)	ϕ150x60	ϕ150x60
Wheels, number front rear(x=driven wheels)		1x+1/2	1x+1/2
Mast height lowered	h_1(mm)	2310	2310
Max. lift height	**h_3(mm)**	**3300**	**3300**
Mast height extended	h_4(mm)	4165	4165
Height of tiller in drive position min./max.	h_{14}(mm)	670/1300	670/1300
Lowered fork height	l(mm)	850	850
Overall length	l_4(mm)	1000	1000
Length to face of forks	l_1(mm)	1657	1657
Overall width	b_1(mm)	950	1100
Hook lifting distance	b_5(mm)	200	200
Aisle width	A_{st}(mm)	1150	1150
Turning radius	W_a(mm)	1560	1560
Travel speed, laden/unladen	Km/h	3.8/4	3.8/4
Lift speed, laden/unladen	m/s	0.09/0.12	0.09/0.12
Lowering speed, laden/unladen	m/s	0.14/0.12	0.14/0.12
Battery voltage, nominal capacity K_5	V/Ah	24/240	24/240
Battery weight	kg	240	240
Battery box dimensions	mm	675x254x500	675x254x500
Service weight(without battery)	kg	2520	3240

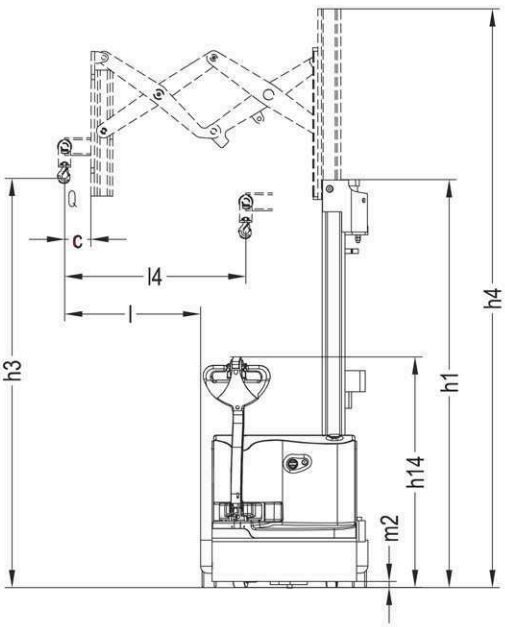

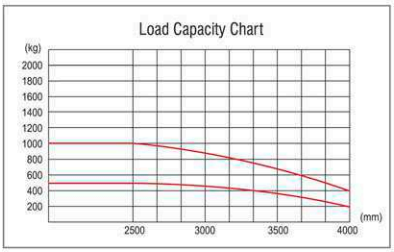

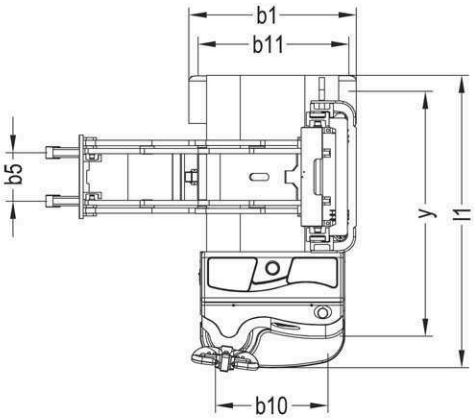

Electric Pallet Stacker

SHIGEMITSU
マティアリアル ハンドリング イクィプメンツ

Model:
MP20S

The MP20S, with small turning radius and lowest height (1.08~1.38m), offers Double pallet Initial lifting, with Initial lift have 120mm lift to easily negotiate over ramps and bridging plates as well as the ability to transport a 2000kg load, widely used in low shelves warehouse and small supermarket etc.

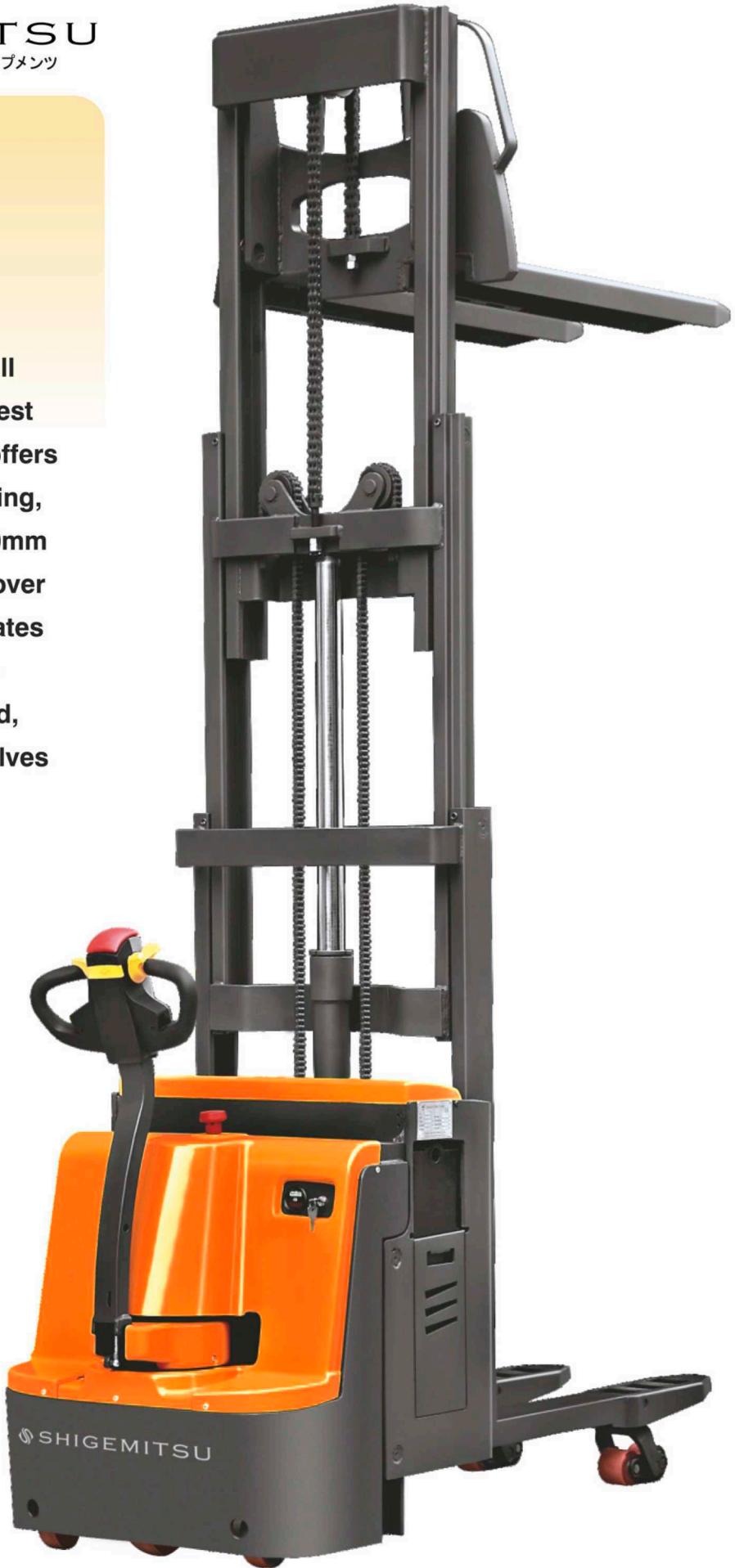

AC

Electric Pallet Stacker

SHIGEMITSU
マティアリアル ハンドリング イクィプメンツ

Side-way Battery

Vertical System

Advantages:

SAFETY AND EFFICIENCY

- Carry two pallets at one single time.
- The tiller head is equipped with an emergency reverse direction switch, which provides safer operation.
- Built-in pressure relief valve protects the truck from overload, and increases the truck's safety.
- Stepless speed control and turtle speed switch.

STRUCTURAL

- Vertical driving wheel offers small turning radius.
- Dividable and exchangeable mast.
- Adjustable floating balance wheel is resistant to wear and stable.
- Sliding rail connects the moving part of the front and rear, makes lifting and lowering stable.

EASY MAINTENANCE

- CANbus technology reduces wiring complexity.
- Hall-effect throttle control eliminates ware components and prolongs its use time.
- The balance wheel is detachable, convenient to maintain.
- Integral and modularized electrical system makes the maintenance of the electrical parts convenient.

Model:
MP20S-III

AC

1KG=2.205LB 1INCH=25.40MM

Model		MP20S	MP20S-III
Load capacity/rated load	**Q(kg)**	**2000**	**2000**
Load capacity/rated load with mast lift	Q(kg)	1000	1000
Load capacity/rated load with wheel arm lift	Q(kg)	2000	2000
Load center distance	c(mm)	600	600
Load distance, center of drive axle to fork	x(mm)	831	802
Fork height, lowered	h_{13}(mm)	90	90
Tyre size, front	mm	ϕ250x70	ϕ250x70
Tyre size, rear	mm	ϕ80x70	ϕ80x70
Additional wheels(dimensions)	mm	ϕ127x57	ϕ114x60
Wheels, number front rear(x=driven wheels)		1X+2/4	1X+2/4
Height, mast lowered	h_1(mm)	1082/1212/1382	-
Max. lift height	h_3(mm)	1600/2000/2500	800
Initial lift	h_5(mm)	120	120
Height of tiller in drive position min./max.	h_{14}(mm)	780/1230	780/1230
Overall length	l_1(mm)	1962	1760
Length to face of forks	l_2(mm)	862	608
Overall width	b_1(mm)	775	682
Fork dimensions	s/e/l(mm)	60/180/1100	60/180/1150
Width overall forks	b_5(mm)	580/650	550
Aisle width for pallets 1000x1200 crossways	A_{st}(mm)	2238	1972
Aisle width for pallets 800x1200 lengthways	A_{st}(mm)	2288	2022
Turning radius	W_a(mm)	1705	1422
Travel speed,laden/unladen	Km/h	4.5/5.2	6/6
Lift speed,laden/unladen	m/s	0.03/0.04	0.06/0.11
Lowering speed,laden/unladen	m/s	0.05/0.045	0.12/0.13
Battery voltage,nominal capacity K_5	V/Ah	24/210	24/160
Battery weight	Kg	196	160
Battery dimensions l/w/h	mm	750x170x580	645x148x560
Service weight(with battery)	Kg	950	600

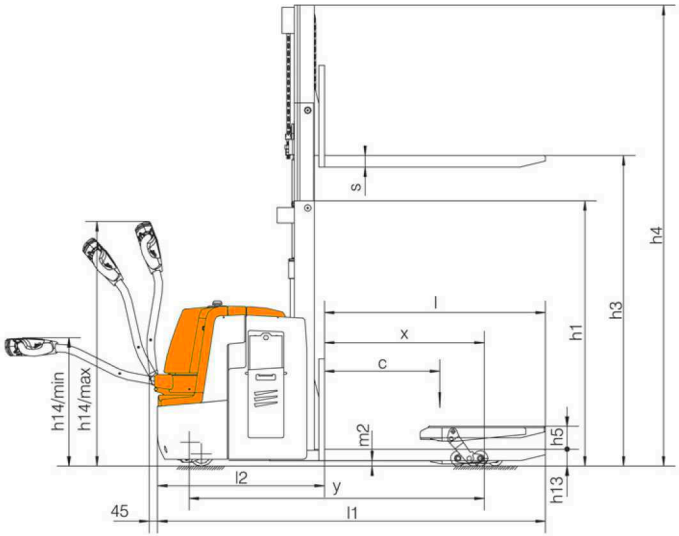

Standard mast types

Three-stage mast			
h1	h2	h3	h4
1082	~	1600	2118
1212	~	2000	2508
1382	~	2500	3018

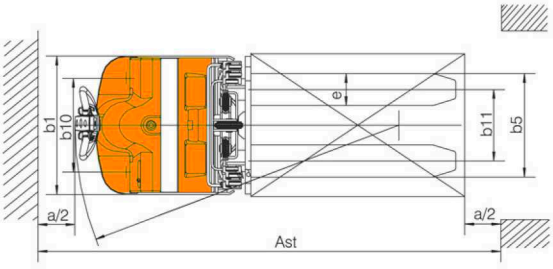

Electric Pallet Truck

SHIGEMITSU
マティアリアル ハンドリング イクィプメンツ

Hot Sale

Model:

MP15W
MP18W

The Mini type with same size as hand pallet truck widely used in narrow aisle workshop, supermarket & cargo containers.

AC Function

Conforms to EN ISO3691-1:2012
EN 16307-1:2013
Based on Directive 2006/42/EC

Advantages:

- With smallest turning radius 1320mm-1389mm (width 520/550/685mm)
- Brushless motor with high electric efficiency , maintenance free.
- Full sealed battery free to maintaining, big capacity 80AH fit for high-intensitive use.
- Max speed limit button can release brake when handle upright, reduce turning space greatly. (option for Germany Frei handle)
- High travel speed is up to 5.3-5.8km/h, improve productive efficiency.
- Floating balance wheel supports automatic height-adjusting.
- Horizontal drive wheel provides convenient replacement.

Standard Features

- Tiller Head with Max speed limit button.
- Emergency stop & belly button.
- BDI and hour meter.
- Casters to balance stability.
- Sealed battery.
- Brushless Horizontal motor.
- Built-in Charger.
- Exist roller.

Option

- Germany FREI Tiller Head.
- Out side charger.
- Fork width and length (size).
- Load backrest.

Electric Pallet Truck

SHIGEMITSU
マティアリアル ハンドリング イクィプメンツ

Multi-Function display

Standard Handle

Frei tiller head (option)

1KG=2.205LB 1INCH=25.40MM

Model		MP15W	MP18W
Load capacity	**Q(kg)**	**1500**	**1800**
Fork height,lowered	h_{13}(mm)	85/75	87/77
Tyre size,front	mm	Φ195	Φ195
Tyre size,rear	mm	Φ80/Φ74	Φ85/Φ75
Wheels, number front rear（x = driven wheels）		1X-2/4	1X-2/4
Height of tiller in drive position min./max	h_{14}(mm)	950/1310	950/1310
Overall length	l_1(mm)	1508/1578	1528/1598
Length to face of forks	l_2(mm)	358	378
Overall width	b_1(mm)	685	685
Fork dimensions	s/e/l(mm)	53/160/1150(1220)	60/160/1150(1220)
Width overall forks	b_5(mm)	520/550/685	520/550/685
Aisle width for pallets 1000x1200(1200crossways)	A_{st}(mm)	1708/1778	1728/1798
Aisle width for pallets 800x1200(1200lengthways）	A_{st}(mm)	1758/1778	1778/1798
Turning radius	Wa(mm)	1320/1389	1340/1409
Travel speed,laden/unladen	Km/h	5.3/5.8	5/5.5
Battery voltage/nominal capacity	V/Ah	24/80	24/80
Battery dimensions l/w/h	mm	260/169/215	260/169/215
Battery weight	Kg	49	49
Service weight(with battery)	Kg	230	250

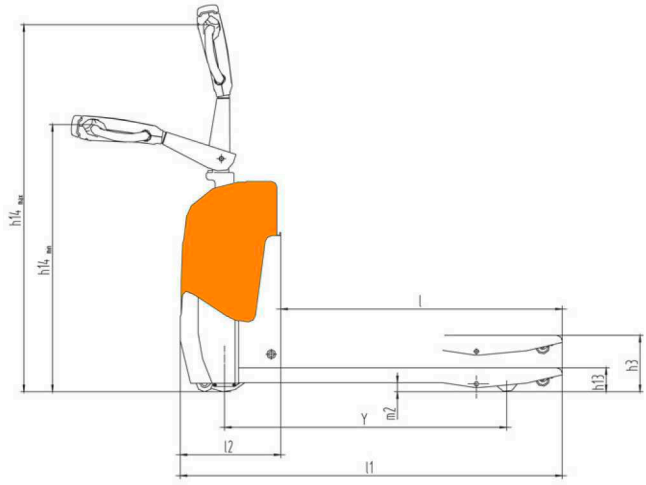

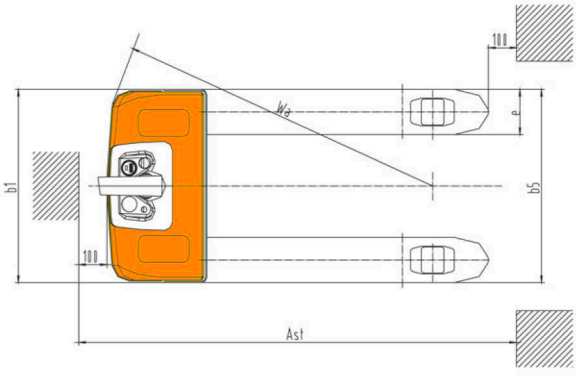

SHIGEMITSU
マティアリアル ハンドリング イクィプメンツ

Hot Sale

Model: MP20H

The super light Walkie type with small turning radius and low profile chassis, widely used in Narrow Space like supermarket and workshop.

AC Function

Electric Pallet Truck

SHIGEMITSU
マティアリアル ハンドリング イクィプメンツ

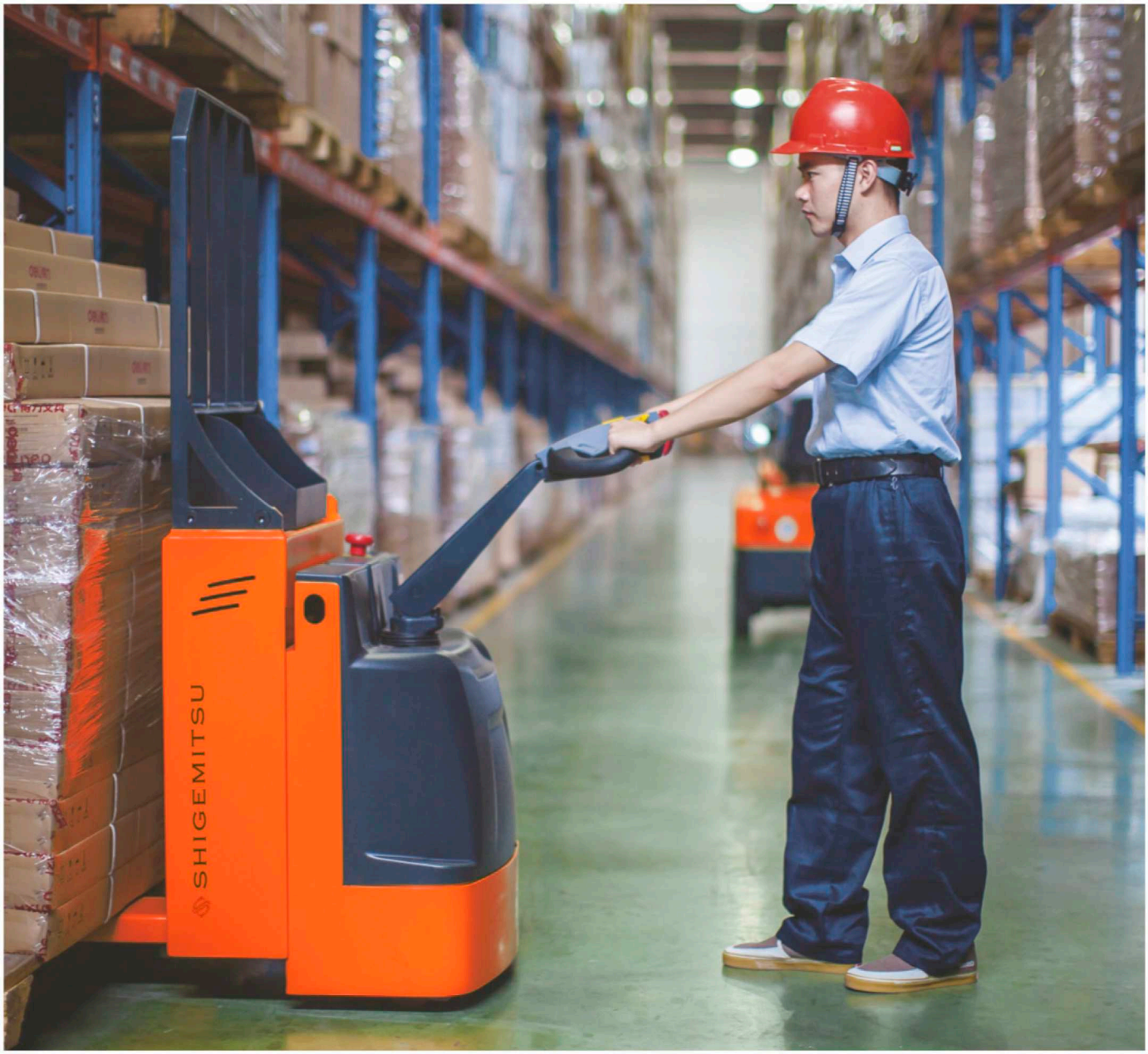

Advantages:

- Load capacity is 2000kg.
- Brushless DC driving motor, convenient to control.
- Mechanical steering.
- Regenerative and electro-magnetic service brake, which allows safe and reliable brake and prolongs the life time.
- Side way battery with roll out system is very convenient to replace batteries.
- Entry roller allows convenient working.
- High efficiency motor keeps long time continuous work and is energy saving and environmental.
- Travel speed under laden up to 5km/h, 6% maximum gradeability.
- With nice looking ,not exposed balanced wheel is more safe.

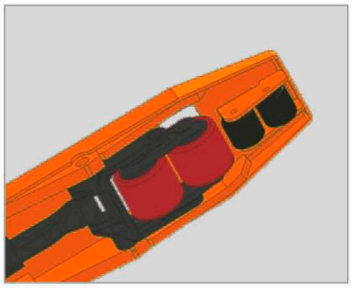

Steel guide wheels are smoothly for pallet moving.

Roll-out system side-way battery convenient to replace.

Option of backrest.

1KG=2.205LB 1INCH=25.40MM

Model		MP20H
Load capacity	**Q(kg)**	**2000**
Load center	c(mm)	600
Load distance	x(mm)	820/870/940
Tyre size, front	mm	Φ250×80
Tyre size, rear	mm	Φ80×70
Additional wheels (dimensions)	mm	Φ114×60
Wheels, number front rear(x=driven wheels)		1X+2/4
Height of tiller in drive position min./max.	h14(mm)	850/1200
Overall length	l1(mm)	1695/1745/1815
Length to face of forks	l2(mm)	595
Overall width	b1(mm)	765
Fork dimensions	S/e/l(mm)	53×180×1100(1150/1220)
Width overall forks	b5(mm)	520/550/650/685
Aisle width for pallets 1000x1200 crossways	Ast(mm)	1895/1945/2015
Aisle width for pallets 800x1200 lengthways	Ast(mm)	1995/1995/2015
Turning radius	Wa(mm)	1400/1450/1520
Travel speed, laden/unladen	Km/h	5/5.1
Battery voltage, nominal capacity K5	V/Ah	24/165(210)
Battery weight	Kg	170(196)
Battery dimensions l/w/h	mm	750×170×474(534)
Service weight(with battery)	Kg	500

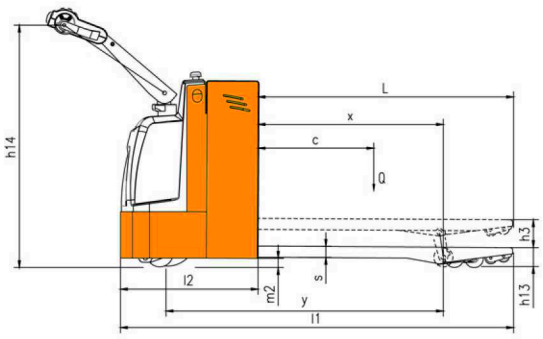

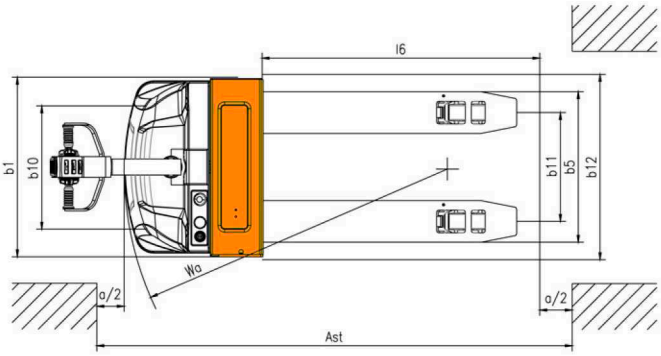

Electric Pallet Truck

SHIGEMITSU
マティアリアル ハンドリング イクィプメンツ

Hot Sale

Model:
MP20KD-1

The super light Walkie type (2000kg/4400lbs) with small turning radius and low profile chassis, widely used in narrow space like supermarket and workshop.

◀ One set side way battery

AC

TÜV SÜD CE

Conforms to EN 1175-1:1998
EN ISO3691-1:2008
Based on Directive 2006/42/EC

SHIGEMITSU
マティアリアル ハンドリング イクィプメンツ

Model:
MP20KD-II

◀ Swing-out battery

AC

Drive System

Multi function indicator and hour meter

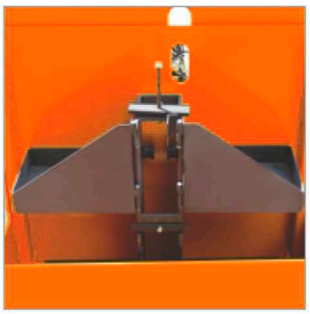

Swing-out battery tray

Electric Pallet Truck

SHIGEMITSU
マティアリアル ハンドリング イクィプメンツ

Advantages:

SAFETY AND PRODUCTIVITY:

- Advanced AC control system eliminats the motor brushes and directional contactors, which makes the minimal maintenance requirements. Intelligentized regenerative brake system: increase overall truck performance by decreasing battery charge intervals.
- Side-way battery with roll-out system is very convenient to replace batteries.
- Emergency reversing device.
- Built-in pressure relief valve protects the trucks from overloads.
- Long handle tube supports flexible and laborsaving operation.
- Emergency power disconnect.
- Low speed switch in the handle.
- Stepless speed control.

STRUCTURAL:

- Water-proof and dust proof vertical driving wheel offers small turning radius.
- The riser axle located at the highest point of forks, protects riser axles from constant contact by uneven floors. Pull rod design against bending .
- Spring-loaded castors improve lateral stability on uneven floors and enhance truck performance and service life.
- Formed heavy gauge steel for maximum strength forks.

SERVICEABILITY:

- Low battery protection setting prolongs the battery life.
- CANbus technology reduces wiring complexity.
- All pivot points have grease fitting and serviceable bushing, reducing component-wearing.

1KG=2.205LB 1INCH=25.40MM

Model		MP20K(D)-I	MP20K(D)-II
battery type		1 set side way battery	swing-out battery
Load capacity/rated load	**Q(kg/lbs)**	**2000/4400**	**2000/4400**
Load centre distance	c(mm/inch)	600/23.6	600/23.6
Load distance,centre of drive axle to fork	x(mm/inch)	815/865/935(32/34/36.8)	935/36.8
Tyre size,front	mm/inch	ϕ250x70/ϕ10x2.8	ϕ250x70/ϕ10x2.8
Tyre size rear	mm/inch	ϕ82x126(98)/ϕ3.2x5(3.85)	ϕ82x126(98)/ϕ3.2x5(3.85)
Additional wheels(dimensions)	mm/inch	ϕ127x57/ϕ5x2.2	ϕ127x57/ϕ5x2.2
Wheels,number front rear(x=driven wheels)		1X+2/2(4)	1X+2/2(4)
Height of tiller in drive position min./max.	h_{14}(mm/inch)	780/1230(30.7/48.4)	780/1230(30.7/48.4)
Overall length	l_1(mm/inch)	1655/1705/1775(65.2/67.1/69.1)	1805/71
Length to face of forks	l_2(mm/inch)	555/21.9	555/21.9
Overall width	b_1(mm/inch)	775/30.5	775/30.5
Fork dimensions	s/e/l(mm/inch)	54x180x1100/1150/1220(2.1x7x43/45/48)	54×180×1220/2.1x7x48)
Width overall forks	b_5(mm/inch)	520/550/650/685(20.5/22/26/27)	550/685(22/27)
Aisle width for pallets 1000x1200 crossways	A_{st}(mm/inch)	2015/2065/2135(79/81/84)	2165/85
Aisle width for pallets 800x1200 lengthways	A_{st}(mm/inch)	2115/2115/2135(83/83/84)	2165/85
Turning radius	W_a(mm/inch)	1400/1450/1520(55/57/60)	1550/61
Travel speed,laden/unladen	Km/h	5.5/5.6	5.5/5.6
Battery voltage,nominal capacity K5	V/Ah	24/210	24/200
Battery weight	Kg/lbs	170/375	128/281
Battery box dimensions	mm	750x170x534	(245x190x252)x4
Service weight(with battery)	Kg/lbs	620/1367	620/1367

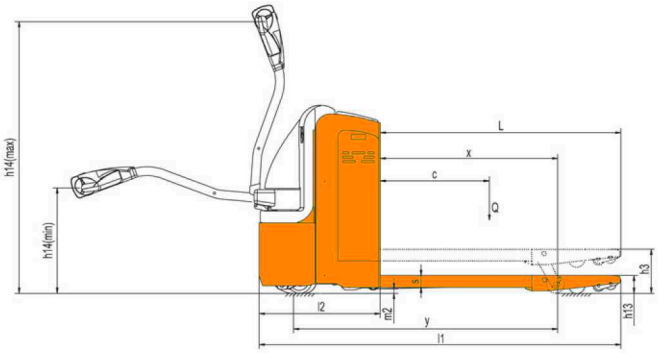

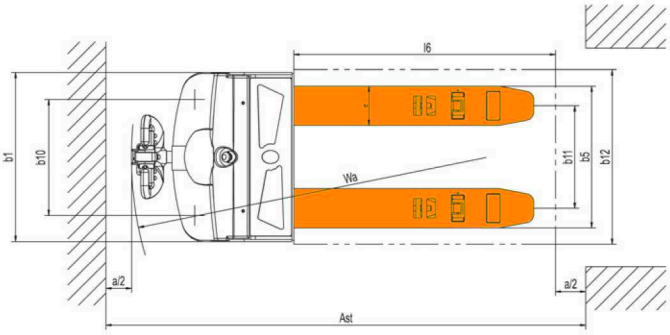

Electric Pallet Truck

SHIGEMITSU
マティアリアル ハンドリング イクィプメンツ

Hot Sale

Model:

MP20R-I
MP20R-II
MP25R-I

The platform pallet truck with small turning radius and super light steering system. widely used in Narrow Space like small supermarket and narrow workshop.

AC

EPS

Conforms to EN 1175-1:1998
EN ISO3691-1:2008
Based on Directive 2006/42/EC

Standard features

- Germany FREI Tiller Head
- Emergency stop & belly button
- BDI and hour meter
- Casters to balance stablity
- Industrial battery
- Brushless AC motor
- Vertical driving wheel
- Sideway battery change
- Out side charger
- Platform with speed sensor

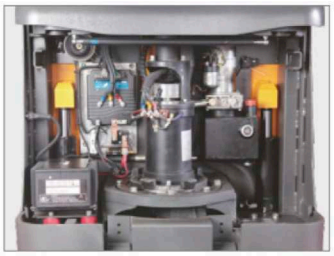

MOSFET control system

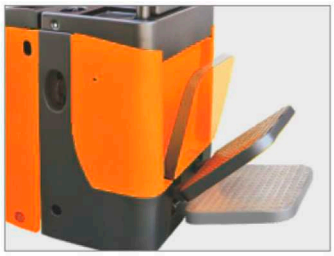

Foldable platform with speed sensor

Option

- Fork width and length (size)
- Load backrest
- Built-in Charger
- Customized battery compartment
- Entry & exist roller for empty pallets
- EPS (for CBD20R-I, CBD25R-I)

Entry roller for easy operation

Germany Frei tiller head

Electric Pallet Truck

SHIGEMITSU
マティアリアル ハンドリング イクィプメンツ

1KG=2.205LB 1INCH=25.40MM

Model		MP20R-I	MP25R-I	MP20R-II
Load capacity	**Q(kg)**	**2000**	**2500**	**2000**
Load centre distance	c(mm)	600	600	600
Load distance, centre of drive axle to fork	x(mm)	818/868/938	818/868/938	815/865/935
Tyre size, front	mm	ϕ250x70	ϕ250x70	ϕ250x70
Tyre size, rear	mm	ϕ82x90/ϕ78x90	ϕ82x90/ϕ78x90	ϕ82x126(98)
Additional wheels(dimensions)	mm	ϕ127x57	ϕ127x57	ϕ127x57
Wheels, number front rear(x=driven wheels)		1X+2/4	1X+2/4	1X+2/2(4)
Height of tiller in drive position min./max.	h_{14}(mm)	1150/1450	1150/1450	1150/1430
Overall length	l_1(mm)	1823/1873/1943	1823/1873/1943	1710/1760/1830
Length to face of forks	l_2(mm)	723	723	610
Overall width	b_1(mm)	733	733	775
Fork dimensions	s/e/l(mm)	53x180x1100(1150/1220)	53x180x1100(1150/1220)	53×180×1100 (1150/1220)
Width overall forks	b_5(mm)	520/550/650/685	520/550/650/685	520/550/650/685
Aisle width for pallets 1000x1200 crossways	A_{st}(mm)	2135/2185/2255	2135/2185/2255	1910/1960/2030
Aisle width for pallets 800x1200 lengthways	A_{st}(mm)	2235/2235/2255	2235/2235/2255	2010/2010/2030
Turning radius	W_a(mm)	1700/1750/1820	1700/1750/1820	1550/1600/1670
Travel speed, laden/unladen	Km/h	7.9/8	6.7/6.8	7/7.1
Battery voltage, nominal capacity K_5	V/Ah	24/240	24/240	24/210
Battery weight	Kg	240	240	170
Battery dimensions l/w/h	mm	650x250x505	650x250x505	750×170×534
Service weight (with battery)	Kg	720	720	710

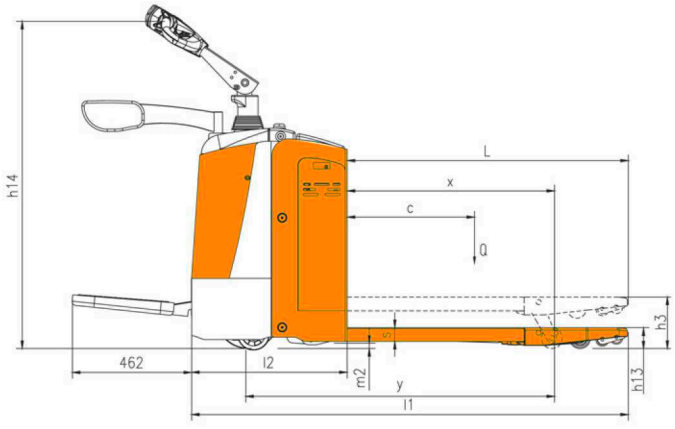

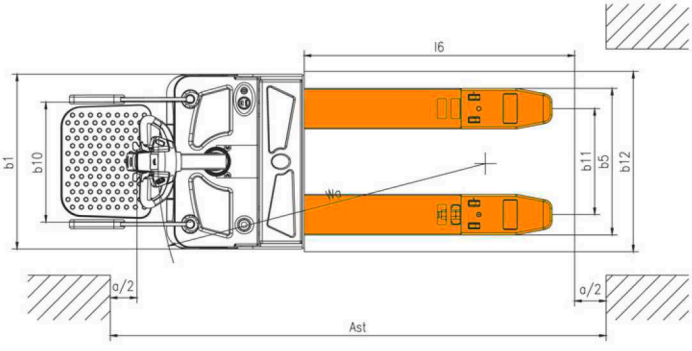

SHIGEMITSU
マティアリアル ハンドリング イクィプメンツ

Model: MP25T MP30T

Heavy Duty type MP-T series Rider Pallet Trucks with capacity (2500 - 4000kg / 5500 - 8800lbs), widely used in supermarket & big warehouse.

1. Germany Frei handle.
2. High & Low speed switches.
3. Large storage compartment near console to store tools, pencils and paper.

AC EPS

Advantages:

SAFETY AND EFFICIENCY

- Smooth running, strong load capacity ,excellent climbing ability, with durable and reliable truck body and wheels.
- Side-standing operation, safety handle bar provides safty operation.
- Electric power steering system(EPS)
- Multi-function display: battery status, hour meter, fault code, slow running state, etc.
- Switch control equipped armrest for lifting/lowering, slow running and the horn functions.
- High-capacity Battery (300-700Ah) and big power Drive Motor provides strong power and ensures long working time.
- Efficient micro computer MOS controlling system.
- Adjustable-speed AC motor provides long life, free maintenance and excellent performance for the ramp up & down.
- Emergency reverse direction switch equipped handle, provides safer operation.
- Build-in pressure relief valve protects the truck from overloads.
- Emergency power disconnector.
- Turtle speed switch.

STRUCTURAL:

- Standing drive motor system easy for maintenance.
- Equipped with a load-backrest(different height is avaiable).
- The lifting height reaches 135mm, which provides better passing ability.
- Combined balance wheels increase steadiness, preventing the truck from being rocked from side to side.
- The balance wheel is detachable, it is convenient to maintain.
- The side door of battery is conveniently to be replaced and service .

EASY MAINTENANCE

- Low battery protection setting prolong the battery use time.
- CANbus technology reduces wiring complexity, making the line clear, orderly and easy to repair. And also increases the truck's reliability.
- Hall-effect throttle control eliminates wear components and prolongs its use time.
- With reasonable design, the cover is reliable and easy to dismantle, which makes the maintenance of the electrical parts very easy.

Electric Pallet Truck

SHIGEMITSU
マティアリアル ハンドリング イクィプメンツ

1KG=2.205LB 1INCH=25.40MM

Model		MP25T	MP30T
Load capacity/rated load	**Q(kg/lbs)**	**2500/5500**	**3000/6600**
Load centre distance	c(mm/inch)	600/24	600/24
Load distance,centre of drive axle to fork	x(mm/inch)	933/36.8	933/36.8
Tyre size, front	mm/inch	ϕ250x80/ϕ10x3.2	ϕ250x80/ϕ10x3.2
Tyre size, rear	mm/inch	ϕ82x173/ϕ3.2x6.8	ϕ82x173/ϕ3.2x6.8
Additional wheels(dimensions)	mm/inch	ϕ127x57/ϕ5x2.3	ϕ127x57/ϕ5x2.3
Wheels, number front rear(x=driven wheels)		1X+2/2	1X+2/2
Height of tiller in drive position min./max.	h_{14}(mm/inch)	1041/1374(41/54.1)	1041/1374(41/54.1)
Overall length	l_1(mm/inch)	2143/84.4	2143/84.4
Length to face of forks	l_2(mm/inch)	923/36.3	923/36.3
Overall width	b_1(mm/inch)	936/36.9	936/36.9
Fork dimensions	s/e/l(mm/inch)	55x230x1220/2.2x9.1x48	55x230x1220/2.2x9.1x48
Width overall forks	b_5(mm/inch)	685/27	685/27
Aisle width for pallets 1000x1200 crossways	A_{st}(mm/inch)	2343/92.2	2343/92.2
Aisle width for pallets 800x1200 lengthways	A_{st}(mm/inch)	2343/92.2	2343/92.2
Turning radius	W_a(mm/inch)	1860/73.2	1860/73.2
Travel speed,laden/unladen	Km/h	7.5/8	6/6.5
Battery voltage, nominal capacity K_5	V/Ah	24/300	24/300
Battery weight	kg/lbs	300/660	300/660
Battery dimensions l/w/h	mm/inch	810x212x665/31.9x8.3x26.2	810x212x665/31.9x8.3x26.2
Service weight(with battery)	kg/lbs	860/1896	860/1896

Option: Max capacity up to 4000kg/8800lbs
Max.Fork length: 2100mm/82inch
Two pallet avaliable

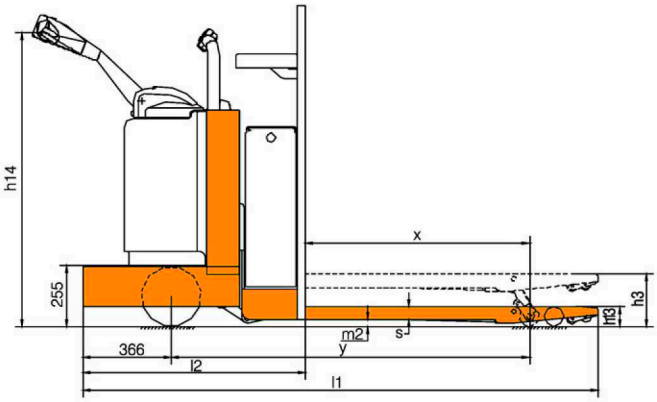

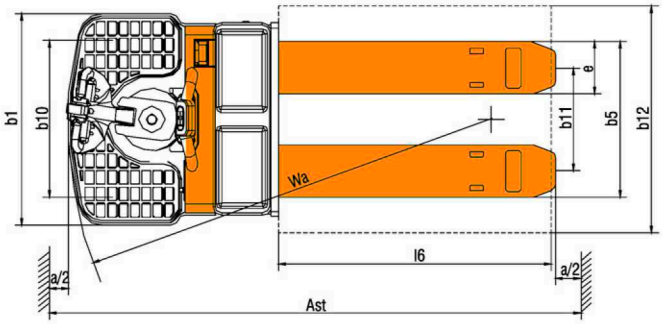

Electric Pallet Truck

SHIGEMITSU
マティアリアル ハンドリング イクィプメンツ

Model:

MP20Z
MP25Z

▶ Stand type

▶ Seated type

AC

EPS

Proportional Power assistant steering

Rapid and simple battery changing system (option)

Open structure design makes repair and maintenance convenient.

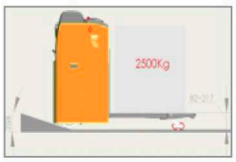

1. With strong power and good throughput capacity, gradeability under unladen can reach 25% and arrive 10% under laden situation.
2. Lift height of 135mm is better for pallets applicability.

Advantages:

SAFETY AND PRODUCTIVITY:

- 2000/2500kgs load capacity.
- Advanced AC control with reliable performance is easy to maintain. Speed frequency control makes good control performance.
- Electric power steering system(EPS).
- Intelligentized regenerative brake system combined with electromagnetic system allows safe and reliable brake and prolongs life time.
- Side battery with roll out system, convenient to handle.
- Connecting rod will not bend and deform at working, and the length can be adjust accurately and conveniently.
- The guide wheel on fork head makes convenient pallet work.
- High level configuration of motor power and battery capacity, max travel speed under laden arrives 7.5-7.8km/h, greatly improved work efficiency and reliability.
- With good looking and small turning radius.
- The key components is set compact and reasonable, which is convenient to maintenance.

Electric Pallet Truck

SHIGEMITSU
マティアリアル ハンドリング イクィプメンツ

1KG=2.205LB 1INCH=25.40MM

Model		MP20Z	MP25Z
Operate type		seated	seated
Load capacity	**Q(kg)**	**2000**	**2500**
Load centre distance	c(mm)	600	600
Load distance, centre of drive axle to fork	x(mm)	864	825/875/945
Tyre size, front	mm	ϕ250x80	Φ250×80
Tyre size, rear	mm	ϕ82x90	Φ82×98
Additional wheels(dimensions)	mm	ϕ160x55	Φ160×55
Wheels, number front rear(x=driven wheels)		1+1x/4	1X+1/4
Seat height/stand height	h_7(mm)	910	900
Overall length	l_1(mm)	2010	1900/1950/2020
Length to face of forks	l_2(mm)	858	800
Overall width	b_1(mm)	864	864
Fork dimensions	s/e/l(mm)	55x170x1150(1100/1220)	54×180×1100(1150/1220)
Width overall forks	b_5(mm)	520/550/650/685	520/550/650/685
Aisle width for pallets 1000x1200 crossways	A_{st}(mm)	2165	2115/2165/2235
Aisle width for pallets 800x1200 lengthways	A_{st}(mm)	2265	2215/2215/2235
Turning radius	W_a(mm)	1725	1630/1680/1750
Travel speed, laden/unladen	Km/h	6.5/7	7.5/8
Battery voltage,nominal capacity K_5	V/Ah	24/320	24/300
Battery weight	Kg	321	264
Service weight(with battery)	Kg	940	900

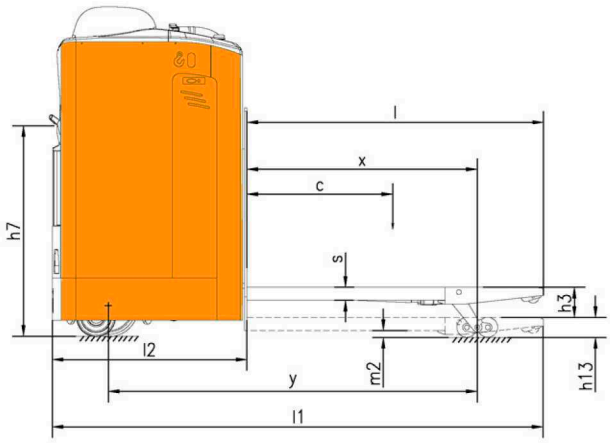

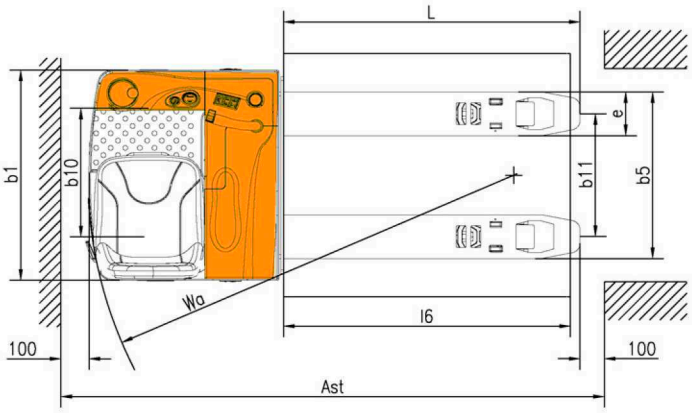

Electric Platform Truck

SHIGEMITSU
マティアリアル ハンドリング イクィプメンツ

Model:
TC20/25/30

1KG=2.205LB 1INCH=25.40MM

Model		TC20	TC25	TC30
Drive type		battery	battery	battery
Load capacity	**Q(kg)**	**2000**	**2500**	**3000**
Axle loading, laden front/rear	kg	1104/2346	975/2825	1660/3090
Axle loading, unladen front/rear	kg	676/774	590/710	865/885
Tyre size, front		6.00-9-10PR	16x5x10 1/2	6.00-9-10PR
Tyre size, rear		6.50-10-12PR	18x5x12 1/2	6.50-10-12PR
Wheels, number front rear(x=driven wheels)		2/2x	2/2x	2/2x
Seat height/stand height	h_7(mm)	800	770	820
Coupling height	h_{10}(mm)	500	400	550
Loading height, unladen	h_{11}(mm)	740	620	760
Length of loading surface	l_3(mm)	2000	2000	2240
Overhang	l_5(mm)	630	770	630
Width of loading surface	b_9(mm)	1250	1100	1400
Overall length	l_1(mm)	3200	3150	3440
Overall width	b_1/b_2(mm)	1250	1100	1400
Turning radius	W_a(mm)	3250	2900	3580
Internal turning radius	b_{13}(mm)	1400	1040	1500
Travel speed, laden/unladen	Km/h	11/13	9/12	11/13
Battery voltage, nominal capacity K5	V/Ah	48/330	48/250	48/395
Battery weight	Kg	662	430	774
Battery dimensions l/w/h	mm	740x426x505	740x426x390	740x426x505
Service weight (with battery)	Kg	1450	1300	1750

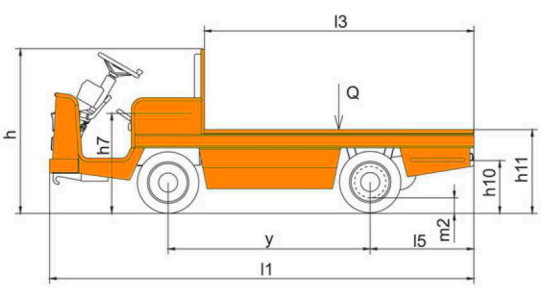

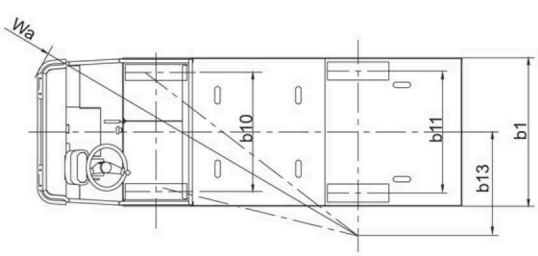

Model: TC10S/15S

Remark: Special size can be made according to customer's requirement.

1KG=2.205LB 1INCH=25.40MM

Model		TC10S	TC15S
Drive type		battery	battery
Load capacity	**Q(kg)**	**1000**	**1500**
Tyre size,front		15x4 1/2-8	15x4 1/2-8
Tyre size rear		15x4 1/2-8	4.00-8
Length of loading surface	L1(mm)	1220	1220
Width of loading surface	W(mm)	1000	1000
Loading height,unladen	H2(mm)	460	480
towing height	H3(mm)	260	280
Seat height/stand height	H4(mm)	835	835
Overall length	L(mm)	2485	2485
Overall width	B(mm)	1000	1000
height (standard)	H(mm)	1800	1810
height (with cabin)	H1(mm)	1240	1250
Turning radius	Wa(mm)	1998	1998
Travel speed,laden/unladen	Km/h	12/13	10/13
Battery voltage,nominal capacity K5	V/Ah	48/240	48/270
Battery weight	kg	350	400
Service weight (with battery)	kg	980	1080

Optional cabin

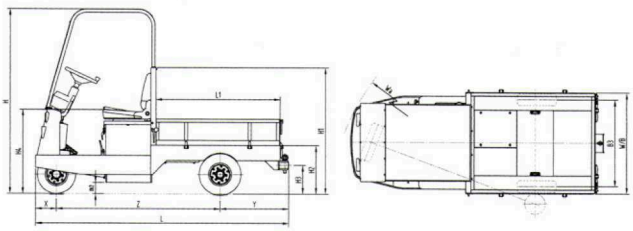

Electric Puller

Model: TCD15W

SHIGEMITSU
マティアリアル ハンドリング イクィプメンツ

1KG=2.205LB 1INCH=25.40MM

Model		TCD15W
Drive type		battery
Operate type		pedestrian
Load capacity	**Q(kg)**	**1500**
Max. rated tractive force	N	300
Tyre size, front	mm	16x6.5-8.00
Tyre size, rear	mm	127
Wheels, number front rear(x=driven wheels)		x2/1
Height of tiller in drive position min./max.	h_{14}(mm)	890
Overall length	l_1(mm)	1695
Overall width	b_1/b_2(mm)	722
Turning radius	W_a(mm)	1290
Travel speed,laden/unladen	Km/h	4.8/5.5
Max. drawbar pull,laden/unladen	N	1000
Service brake		electric
Battery voltage,nominal capacity K5	V/Ah	24/80
Battery weight	kg	49
Max. additional load, front wheel	kg	150
Draw chassis height	h_{10}(mm)	178/218/258
Service weight (with battery)	kg	150

Advantages:

- Smart and powerful, easy for operation.
- Stepless speed control, smooth/controllable speeds.
- Electrically powered with built-in charger, free from taking heavy charger.
- Gel battery, free from maintenance.
- Emergency stop device.
- Pneumatic rubber drive wheel with alternative tread patterns and material specifications.
- Low battery protection setting.
- Fingertip control and compact size make the unit easy to maneuver.
- Charger with UL certificate.
- Ergonomic handle.

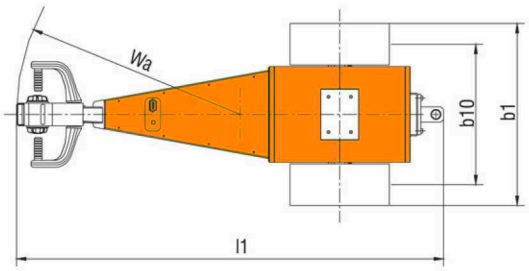

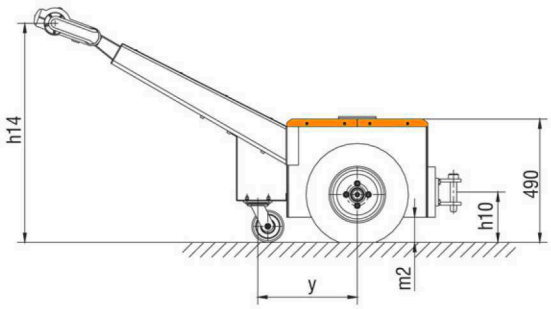

Electric Reach Stacker

SHIGEMITSU
マティアリアル ハンドリング イクィプメンツ

Model:
KQH12A
KQH15A
KQH20A

AC

EPS
option

Option: No foot pedal & guard

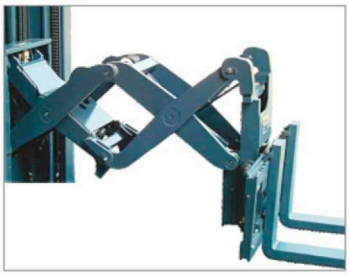

Option: Double scissors forks

Option: Frei Tiller Head

Advantages:

- Compact structure makes it's easy to be used in narrow aisle.
- Stepless speed control, smooth/controllable speed
- Reach distance up to 500mm.
- Fork can be tilted forward 3 degree or backward 5 degree.
- Intelligentized regenerative brake system.

Option:

1) Side shift.
2) Full free lifting mast.
3) EPS for 1.2T,1.5T.

Electric Reach Stacker

SHIGEMITSU
マティアリアル ハンドリング イクィプメンツ

1KG=2.205LB 1INCH=25.40MM

Model		KQH12A	KQH15A	KQH20A
Load capacity/rated load	**Q(kg)**	**1250**	**1500**	**2000**
Load centre distance	c(mm)	500	500	500
Load distance,centre of drive axle to fork	x(mm)	375	365	365
Tyre size,front	mm	ϕ250x82+150x65	ϕ250x82+150x65	ϕ250x82+150x65
Tyre size,rear	mm	ϕ150x82x2	ϕ125x82X4	ϕ125x82X4
Wheels,number front rear(x=driven wheels)		1+2+2	1+2+4	1+2+4
Forks, tilt forward/back	°	2/5	2/5	2/5
Height,mast lowered	h_1(mm)	1635/1885/2135/2385/2635/2235/2395/2560	1640/1890/2140/2390/2640/2200/2360/2520	1640/1890/2140/2390/2640/2200/2360/2520
Free lift	h_2(mm)	~ /~ / ~ / ~ / ~ /1575/1700/1825	~ / ~ / ~ / ~ / ~ /1575/1700/1825	~ / ~ / ~ / ~ / ~ /1575/1700/1825
Max. lift height	**h_3(mm)**	**2000/2500/3000/3500/4000/4500/5000/5500**	**2000/2500/3000/3500/4000/4500/5000/5500**	**2000/2500/3000/3500/4000/4500/5000/5500**
Height,mast extended	h_4(mm)	3070/3570/4070/4570/4920/5570/6070/6570	3070/3570/4070/4570/4920/5570/6070/6570	3070/3570/4070/4570/4920/5570/6070/6570
Overall length	l_1(mm)	2185/2185/2185/2185/2235/2235/2235/2235	2175/2175/2175/2175/2175/2190/2190/2190	2175/2175/2175/2175/2175/2190/2190/2190
Length to face of forks	l_2(mm)	1125	1125	1250
Overall width	b_9/b_{10}(mm)	1170-1270/950	1240-1600/950	1240-1600/950
Fork dimensions	s/e/l(mm)	35/100/1070	35/100/1070	40/100/1070
Reach distance	l_4(mm)	500	500	500
Aisle width for pallets 800x1200 lengthways	A_{st}(mm)	2650/2650/2650/2650/2650/2680/2680/2680	2600/2600/2600/2600/2600/2630/2630/2630	2720/2720/2720/2720/2720/2750/2750/2750
Turning radius	W_a(mm)	1750/1750/1750/1750/1750/1780/1780/1780	1700/1700/1700/1700/1700/1730/1730/1730	1800/1800/1800/1800/1800/1830/1830/1830
Travel speed,laden/unladen	Km/h	4.5/5 / 4.8/5	4.8/5	4.8/5
Lift speed,laden/unladen	m/s	0.16/0.18	0.12/0.16	0.1/0.14
Lowering speed,laden/unladen	m/s	0.27/0.2	0.32/0.15	0.3/0.16
Battery voltage,nominal capacity k5	V/Ah	24/320	24/320(460)	24/450(525)
Battery weight	kg	275	275(300)	325(350)
Battery dimensions	mm	812x270x535	812x270x535	812x324x575
Service weight(with battery)	kg	1370/1405/1440/1470/1500/1870/1970/2070	2050/2050/2100/2150/2150/2250/2330/2420	2430/2430/2450/2500/2500/2600/2680/2750

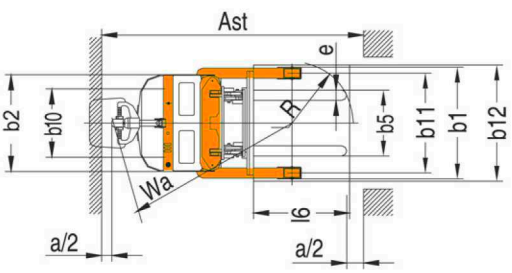

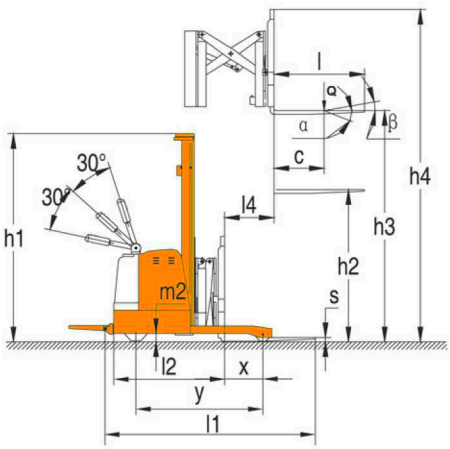

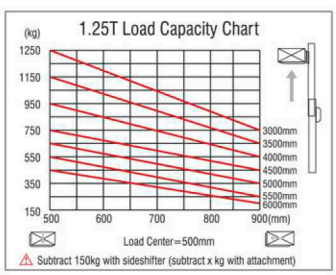

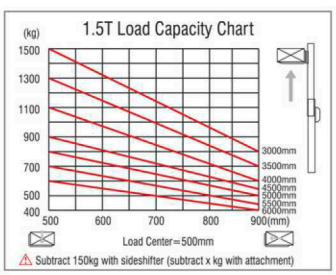

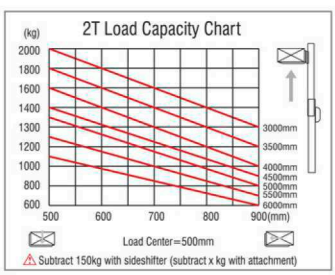

Model: NQ10M NQ15M

Conforms to ISO3691-1:2012, EN1726-1/A1:2003
Machinery Directive 2006/42/EC

Conforms to EN 12895:2000
Electromagnetic compatibility Directive 2004/108/EC

The NQ series Counterbalanced Reach lift truck with innovative design and application-oriented functionality, low noise, no pollution and small turning radius. Widely used for high-shelves in narrow aisle warehouses, supermarkets, etc.

Seated type ▶

Electric Reach Truck

SHIGEMITSU
マティアリアル ハンドリング イクィプメンツ

Model:
NQ10L
NQ15L

Conforms to ISO3691-1:2012, EN1726-1/A1:2003
Machinery Directive 2006/42/EC

Conforms to EN 12895:2000
Electromagnetic compatibility Directive 2004/108/EC

Standing type

Advantages:

Features

- Truck with small width from 1020-1100mm, turning radius from 1700-1740mm and narrow cabin to ensure trucks can be used in drive- in racks.
- Available in either DC or AC power options.
- For daily maintenance of the battery, you DON'T NEED to hang up the battery box. Simply using a battery handle controller, you can automatically remove and replace the battery box.
- Equipped with two separate floating devices, which enhances stability in terms of structure, reducing weight, and prolonging the working life of the driving wheels.
- Full hydraulic steering system, with integrative design of driving and steering, provides low-effort and flexible power steering.
- Integrated driving and turning systems.
- A fully hydraulic steering system ensures flexible turning, and requires less maintenance.
- Optional high-level video system places a camera in the top skid, allowing the operator enhanced visibility.
- Height selection and height positioning system is a high-level configuration, which with manual and automatic control, for automatic positioning with a keypad, enabling the operator to choose the appropriate lift height (optional).

Option

- AC power system.
- Joystick hydraulic controller.
- LCD display and camera.
- Height selection and height position system.

Oil tube inside of the mast with clean wire communications.

With battery handle controller can automatically remove out battery box.

Integrated structure of drive system and steering system.

Optional of battery changing trolley.

Model		NQ15L			NQ15L			NQ10M			NQ15M		
Power			battery			battery			battery			battery	
Operate type			standing			standing			seated			seated	
Capacity/rated load	**Q(kg)**		**1000**			**1500**			**1000**			**1500**	
Lift height	**h_3(mm)**	**3000**	**5000**	**6200**	**3000**	**5000**	**6200**	**3000**	**5000**	**6200**	**3000**	**5000**	**6200**
Load centre distance	c(mm)		500			500			500			500	
Drive wheel	mm		Φ280x100			Φ280x100			Φ280x100			Φ280x100	
Fork wheel	mm		Φ250x80			Φ250x80			Φ285x80			Φ285x80	
Wheels,number front rear(x=driven wheels)			3,2			3,2			3,2			3,2	
Tilt of mast/fork carriage forward/backward	α , β (Grad)	3,5(mast)	3,5(forks)	3,5(forks)	3,5(mast)	3,5(forks)	3,5(forks)	2,3(mast)	~	~	2,3(mast)	~	~
Height,mast lowered	h_1(mm)	2086	2240	2640	2086	2240	2640	2086	2240	2640	2086	2240	2640
Free lift	h_2(mm)	~	1700	2100	~	1700	2100	~	1700	2100	~	1700	2100
Height,mast extended	h_4(mm)	3800	5800	7000	3800	5800	7000	3800	5800	7000	3800	5800	7000
Height of overhead guard(cabin)	h_6(mm)		2200			2200			2114			2114	
Seat height/stand height	h_7(mm)		295			295			920			920	
Height of crura	h_8(mm)		270			270			270			270	
Overall length	l_1(mm)		2360			2360			2390			2390	
Length(barring fork)	l_2(mm)		1700			1800			1850			1850	
Overall width	b_1(mm)		1020			1020			1100			1100	
Fork dimensions	s/e/l(mm)		35/100/1070			35/100/1070			35/100/1070			35/100/1070	
Reach distance	l_4(mm)		600			600			600			600	
Aisle width for pallets 1000x1200 crossways	A_{st}(mm)		2800			2800			2800			2800	
Aisle width for pallets 800x1200 lengthways	A_{st}(mm)		2850			2850			2850			2850	
Turning radius	W_a(mm)		1700			1700			1740			1740	
Travel speed,laden/unladen	Km/h		7/7.2			7/7.2			7/7.2			7/7.2	
Lift speed,laden/unladen	m/s		0.19/0.2			0.19/0.2			0.19/0.2			0.19/0.2	
Lowering speed,laden/unladen	m/s		0.5/0.4			0.5/0.4			0.5/0.4			0.5/0.4	
Battery voltage,nominal capacity K5	V/Ah		48/400			48/400			48/400			48/400	
Battery weight	Kg		550			550			550			550	
Battery dimensions l/w/h	mm		983x404x630			983x404x630			1092x336x650			1092x336x650	
Service weight	kg	2140	2540	2640	2340	2740	2840	2200	2600	2700	2400	2800	2900

DIMENSIONS

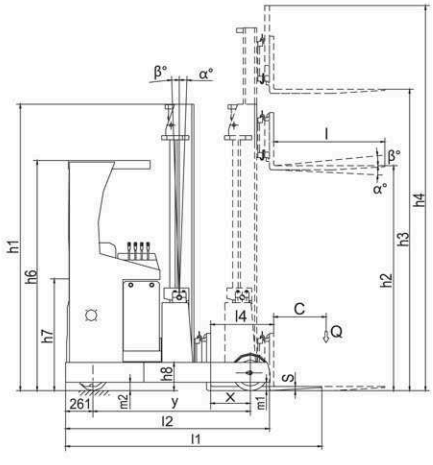

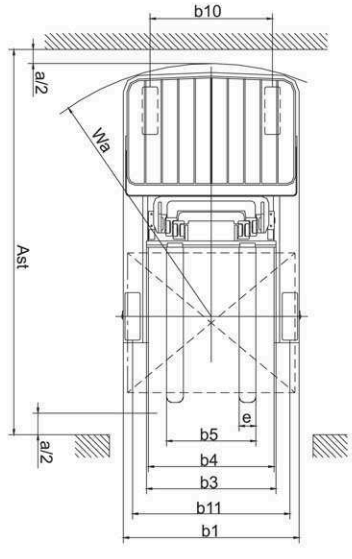

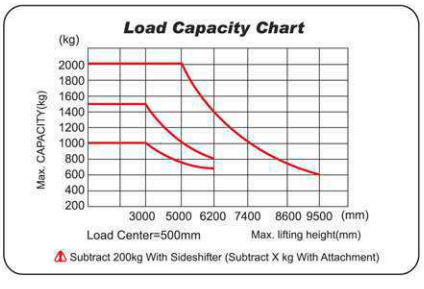

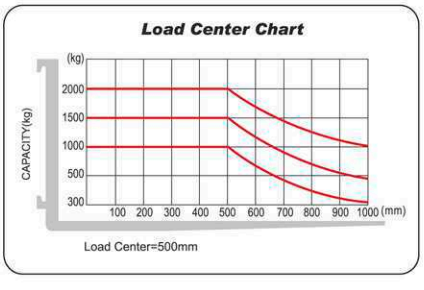

Electric Reach Truck

SHIGEMITSU
マティアリアル ハンドリング イクィプメンツ

Model: NQ20H

Hot Sale

AC

EPS
Option

Conforms to ISO 3691-1:2012, EN1175-1:1998, EN 1726-1/A1:2003
Machinery Directive 2006/42/EC

Conforms to EN 12895:2000
Electromagnetic compatibility Directive 2004/108/EC

Advantages:

STABILITY

- The large and strong chassis ensures sufficient stability of the forklift.
- The max lifting height can reach 9.5 metres.
- Use "H" type mast steel is imported from Germany enhance the use time and stability.
- Large and comfortable compartment with adjustable seat reflects a concept of ergonomic design.
- Use double controllers to realize stepless speed regulation of both lifting and travelling.

SAFETY AND HIGH EFFICIENCY

- Have safety travelling speed limited device in the mast. Travelling speed will automatic lowering when forks height is up 5M.
- Full hydraulic steering system makes turning easy and flexible.
- Adopts hydraulic brake for two front wheel and electric brake for electric brake for driving motor, offer simple operation for travelling and braking .
- Integrated design of driving and steering system without chain transmission, resolve the problems of chain fall-off caused by chain transmission.

EASY MAINTENANCE

- Battery changing offers two type methods :
  1) Side way battery changing by a trolley.
  2) Automatic push-out and pull-in function by a simple battery handle controller .
- Bolt fixed back cover is easy to open for daily maintenance.

OPTION

- Joystick hydraulic controller.
- LCD display and camera (LCD for cold storage are available).
- Height selection and height position system.
- EX explosion proof type.
- Cabin.

Optional of LCD display and camera for high level operation

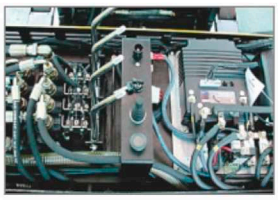

Double controllers with CANbus communication to oil tube and wire

Model		NQ20				NQ20H		
Capacity/rated load	**Q(kg)**	**2000**	**2000**	**2000**	**2000**	**2000**	**2000**	**2000**
Max. lift height	**h_3(mm)**	**3000**	**5000**	**6200**	**7400**	**8000**	**8600**	**9500**
Load centre distance	c(mm)	500	500	500	500	500	500	500
Drive wheel	mm	Φ406x152	Φ406x152	Φ406x152	Φ406x152	Φ406x152	Φ406x152	Φ406x152
Fork wheel	mm	Φ340x104	Φ340x104	Φ340x104	Φ340x104	Φ340x134	Φ340x134	Φ340x134
Wheels,number front rear(x=driven wheels)		2,1	2,1	2,1	2,1	2,1	2,1	2,1
Tilt of mast/fork carriage forward/backward	α , β (Grad)	2,2(mast)	2,2(mast)	2,2(mast)	2,2(mast)	3,5(forks)	3,5(forks)	3,5(forks)
Height,mast lowered	h_1(mm)	2086	2240	2740	3190	3390	3590	3890
Free lift	h_2(mm)	~	1700	2100	2500	2700	2900	3200
Height,mast extended	h_4(mm)	3800	5800	7000	8200	8800	9400	10300
Height of overhead guard(cabin)	h_6(mm)	2200	2200	2200	2200	2200	2200	2200
Seat height/stand height	h_7(mm)	1068	1068	1068	1068	1068	1068	1068
Height of crura	h_8(mm)	270	270	270	270	270	270	270
Overall length	l_1(mm)	2440	2440	2440	2440	2510	2510	2510
Length(barring fork)	l_2(mm)	1950	1950	1950	1950	1950	1950	1950
Overall width	b_1(mm)	1260	1260	1260	1260	1510	1510	1510
Fork dimensions	s/e/l(mm)	40/120/1070	40/120/1070	40/120/1070	40/120/1070	40/120/1070	40/120/1070	40/120/1070
Reach distance	l_4(mm)	600	600	600	600	600	600	600
Aisle width for pallets 1000x1200 crossways	A_{st}(mm)	2880	2880	2880	2880	2880	2880	2880
Aisle width for pallets 800x1200 lengthways	A_{st}(mm)	2930	2930	2930	2930	2930	2930	2930
Turning radius	W_a(mm)	1820	1820	1820	1820	1820	1820	1820
Travel speed,laden/unladen	Km/h	8/8.3	8/8.3	8/8.3	8/8.3	8/8.3	8/8.3	8/8.3
Lift speed,laden/unladen	m/s	0.19/0.2	0.19/0.2	0.19/0.2	0.19/0.2	0.19/0.2	0.19/0.2	0.19/0.2
Lowering speed,laden/unladen	m/s	0.5/0.4	0.5/0.4	0.5/0.4	0.5/0.4	0.5/0.4	0.5/0.4	0.5/0.4
Battery voltage,nominal capacity K5	V/Ah	48/500	48/500	48/500	48/500	48/500	48/500	48/500
Battery weight	Kg	860	860	860	860	860	860	860
Battery dimensions l/w/h	mm	1220x344x727	1220x344x727	1220x344x727	1220x344x727	1220x344x727	1220x344x727	1220x344x727
Service weight	kg	3300	3700	3800	3900	4100	4150	4240

DIMENSIONS

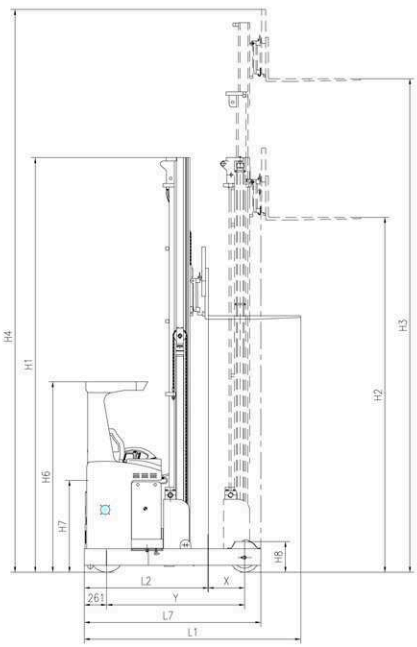

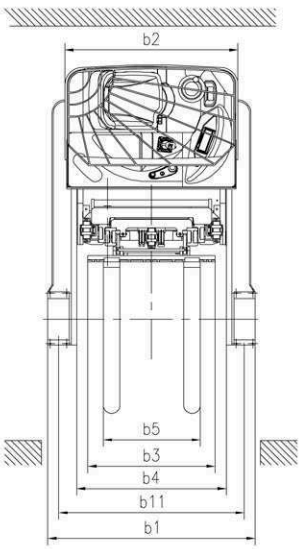

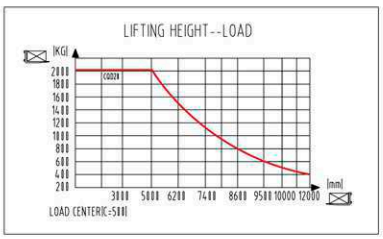

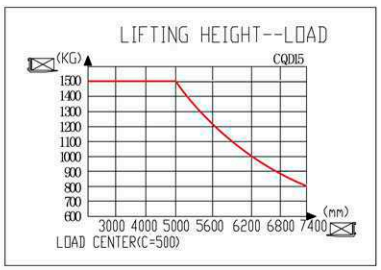

Electric Reach Truck

SHIGEMITSU
マティアリアル ハンドリング イクィプメンツ

Model:
NQ20H2

NQ20H2(EPS) is with very small turning radius 1820mm-1920mm, which is widely used in large warehouses and huge super markets.

Max. lift height:
12000mm

AC

EPS

Camera and positioning: Optional positioning system offers easier pallet handling at height through camera system.

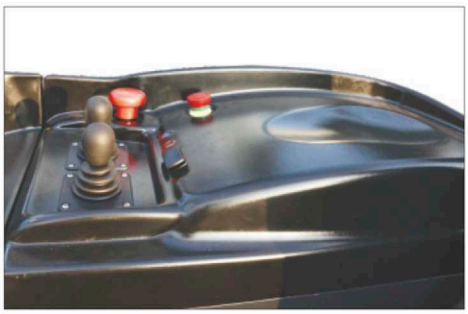

Precise and effortless finger tip control of mast movements and traveling.

Ergonomic and full suspension comfortable seat full adjustable.

Advantages:

Standard

- AC control system.
- Powering steering system (EPS).
- Electronic multi-valve.
- Multi-function display can show: Brake status, Driving direction, Hour meter, Driving speed, Fault code, etc.
- Finger-tip control stick.
- Adjustable speed for forks lifting/lowering mast forward/backward and side shift right/left.
- German ZF brand gear box.
- Adjustable steering wheel.
- With traveling speed limited device when forks at high level.
- Electronic height limited device.
- Use "H" type mast steel is imported from Germany.
- Use double controllers to realize stepless speed regulation of sideshift , both lifting and traveling.
- Have safety traveling speed limited device in the mast.

Option

- Side shift.
- Height selection and height position system.
- LCD display and camera (LCD for cold storage are available).
- EX explosion proof type.
- Travel/back-up flashing lights.
- Battery capacity is suit every type of application of 750Ah to 1100Ah.

Electric Reach Truck

SHIGEMITSU
マティアリアル ハンドリング イクィプメンツ

Model		NQ20H2(EPS)	
Rated capacity	**Q(kg)**	**2000**	**2000**
Load centre	C(mm)	500	500
Service weight	kg	4240	4840
Drive wheel dimension	mm	Φ406X152	Φ406X152
Fork wheel dimension	mm	Φ340X134	Φ340X134
Height, mast lowered	H1(mm)	3390/3590/3890	4190/4490/4790
Free lift	H2(mm)	2700/2900/3200	3600/3900/4200
Max. lift height	**H3(mm)**	**8000/8600/9500**	**10200/11100/12000**
height, mast extended	H4(mm)	8800/9400/10300	11000/11900/12800
Height of overhead guard(cabin)	H6(mm)	2200	2200
Seat height	H7(mm)	1060	1060
Height of crura	H8(mm)	355	355
Fork dimensions	s/e/l(mm)	40/120/1070	40/120/1070
Overall length	L1(mm)	2510	2510
Length (from forks bracket)	L2(mm)	1440	1440
Reach distance	L4(mm)	600	700
Length (barring fork)	L7(mm)	1950	2050
Overall width	b1(mm)	1510	1510
Front width	b2(mm)	1260	1260
Aisle width for pallets 1000x1200 crossways	Ast(mm)	2920	2920
Aisle width for pallets 800x1200 crossways	Ast(mm)	2980	2980
Turning radius	Wa(mm)	1820	1920
Travel speed, laden/unladen	km/h	9.3	9
Lift speed, laden/unladen	mm/s	240/300	240/300
Lower speed, laden/unladen	mm/s	500/400	500/400
Battery dimension	mm	1220X344X727	1220X344X727
Battery capacity	AH	500	500
Battery voltage	V	48	48
Battery weight	kg	860	860

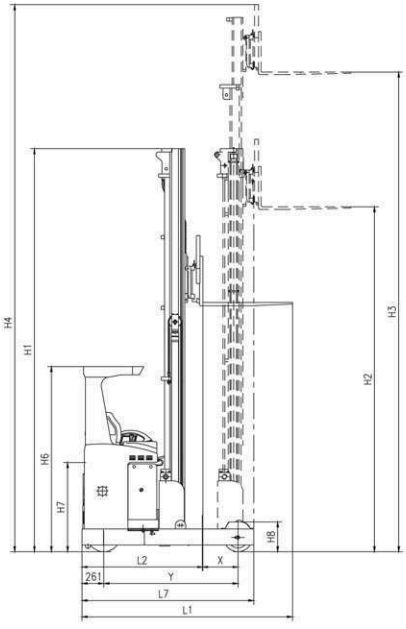

DIMENSIONS

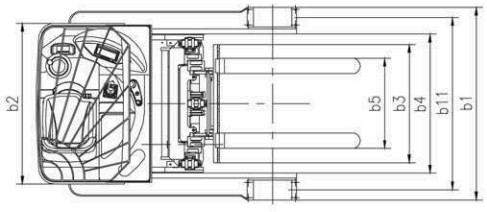

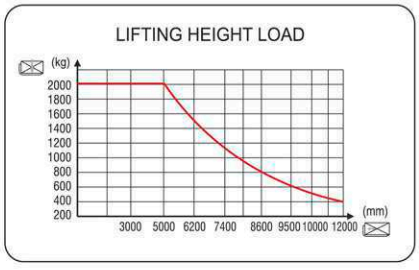

Electric Stacker

SHIGEMITSU
マティアリアル ハンドリング イクィプメンツ

Model:
KDR10
KDR12
KDR15

Walkie type electric stacker provides a cost effective solution for applications involving medium lifting storage and short distance pallets transportation.

AC

Hot Sale

Conforms to EN ISO 3691-1:2012
EN 1726-1/A1:2010
Based on Directive 2006/42/EC
Conforms to EN 12895:2000
Based on Directive 2004/108/EC

* Photo shown with model KDR15-II with free lifting

Electric Stacker

SHIGEMITSU
マティアリアル ハンドリング イクィプメンツ

Advantages:

STRUCTURAL AND SAFETY:

- Advanced AC control system Intelligentized regenerative brake system.
- Multi-function display with BDI and hour meter etc.
- Emergency reversing device.
- Auto deceleration system utilizes regenerative braking.
- Built-in pressure relief valve protects the trucks from overloads.
- Emergency power disconnect .
- Stepless speed control.
- With lifting limit switch to shut off pump motor at the max. lifting height.
- Vertical drive motor has a small turning radius. The motor structure is water-proof and dust-proof.

SERVICEABILITY:

- CANbus technology reduces wiring complexity and increase reliability.
- Advanced AC control system with brushless motor.
- Auto deceleration system utilises regenerative braking.
- Side-way battery with roll-out system is very convenient for replacement.

Model	Remarks
KDR15-I	High configuration with proportional valve
KDR15-II	Standard configuration
KDR15-III	Economy type

KDR15-III mast

Option: Initial lifting with double-pallet function turn to **P55**

Vertical Drive Wheel

Option: Adjustable Forks

1KG=2.205LB 1INCH=25.40MM

Model		KDR15-I	KDR15-II	KDR10-III	KDR12-III	KDR15-III
Load capacity	**Q(kg)**	**1500**	**1500**	**1000**	**1200**	**1500**
Load centre distance	c(mm)	600	600	500	500	600
Load distance, centre of drive axle to fork	x(mm)	697	697	697	697	697
Tyre size, front	mm	ϕ250x70	ϕ250x70	ϕ250×70	ϕ250×70	ϕ250×70
Tyre size, rear	mm	ϕ80x84	ϕ80x84	ϕ80×70	ϕ80×70	ϕ80×70
Additional wheels(dimensions)	mm	ϕ150x60	ϕ150x60	ϕ150×60	ϕ150×60	ϕ150×60
Wheels, number front rear(x=driven wheels)		1x+1/4	1x+1/4	1x+1/4	1x+1/4	1x+1/4
Height, mast lowered	h_1(mm)	1735/1985/2135/2235/2050/2210/2410	1735/1985/2135/2235/2050/2210/2410		2087/1837/2087/2237	
Free lift (option 2500~3500mm)	h_2(mm)	1300/1550/1700/1800/1570/1740/1940	1300/1550/1700/1800/1570/1740/1940		~	
Max. lift height	**h_3(mm)**	**2500/3000/3300/3500/4500/5000/5600**	**2500/3000/3300/3500/4500/5000/5600**		**1600/2500/3000/3300**	
Height,mast extended	h_4(mm)	2955/3455/3755/3955/5030/5510/6110	2955/3455/3755/3955/5030/5510/6110		2087/3087/3587/3887	
Height of tiller in drive position min./max.	h_{14}(mm)	670/1300	670/1300	670/1300	670/1300	670/1300
Overall length	l_1(mm)	1950	1950	1965	1965	2045
Length to face of forks	l_2(mm)	878	878	792	792	878
Overall width	b_1(mm)	820	820	820	820	820
Fork dimensions	s/e/l(mm)	60/180/1070(1150)	60/180/1070(1150)	60/170/1070(1150)	60/170/1070(1150)	60/170/1070(1150)
Width overall forks	b_5(mm)	570/695	570/695	580/695	580/695	580/695
Aisle width for pallets 800x1200 lengthways	A_{st}(mm)	2420	2420	2370	2370	2450
Turning radius	W_a(mm)	1575	1575	1525	1525	1605
Travel speed, laden/unladen	Km/h	5.8/6	5.8/6	5.3/5.6	5.3/5.6	5.8/6
Lift speed, laden/unladen	m/s	0-0.12/0-0.19	0.11/0.14	0.06/0.13	0.06/0.13	0.06/0.13
Lowering speed, laden/unladen	m/s	0-0.35/0-0.12	0.12/0.12	0.13/0.10	0.13/0.10	0.13/0.10
Battery voltage,nominal capacity K_5(Duplex Mast)	V/Ah	24/300	24/240	24/120	24/120	24/200
Battery voltage,nominal capacity K_5(Triplex Mast)	V/Ah	24/300	24/240	~	~	~
Battery weight	kg	260	220	90	90	160
Battery dimensions l/w/h	mm	625x254x545	625x254x500	753x178x240	753x178x240	800x254x320
Service weight(with battery)	kg	1230/1255/1270/1280/1330/1350/1370	1170/1195/1210/1220/1270/1290/1310	650/700/730/750	660/710/740/760	780/830/840/850

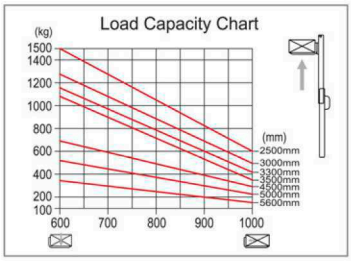

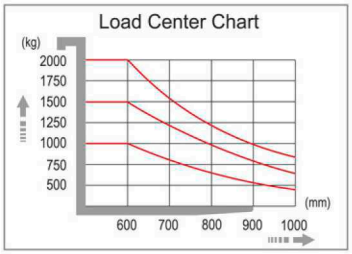

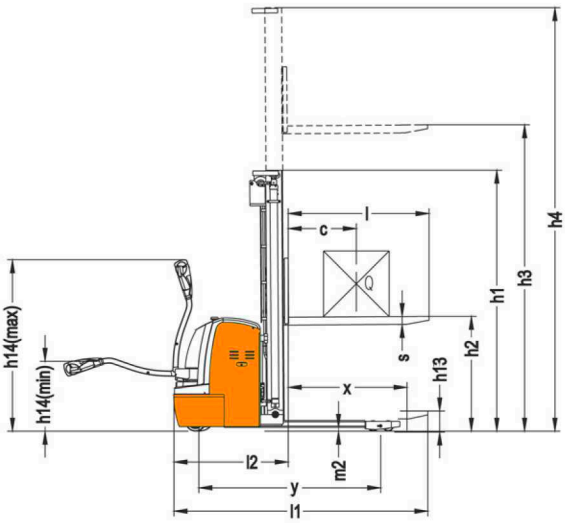

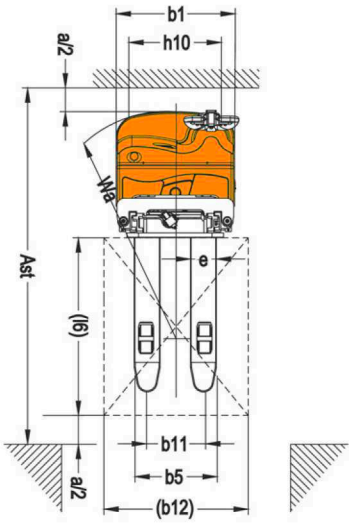

Electric Stacker

SHIGEMITSU
マティアリアル ハンドリング イクィプメンツ

Model:
KD10K
KD12K
KD15K

Fixed forks

Hot Sale

AC

EPS
(Option)

* Photo Shown with model
KD15K-II with free lifting

Advantages:

SAFETY AND PRODUCTIVITY

- AC Motor eliminates carbon brush replacement.
- Multi-function display with BDI and hour meter.
- Side way battery is easy to maintain.
- Damping cushion for low-noise operation.
- Emergency reversing device equipped handle to keep safe.
- Auto deceleration function makes operation more safely.
- Built-in pressure relief valve protects the trucks from overloads, increases the reliability.
- With brake in handle upright and horizontal position, increasing the safety of the truck.
- Emergency power disconnect switch.
- Turtle-shaped low speed switch.
- Stepless speed control.

OPTIMUM STRUCTURAL DESIGN

- Low barycenter ensures the stable operation.
- Vertical driving wheel ensures convenient maintenance and small turning radius. Water-proof and dust-proof motor structure, keeps the braking and motor more durable and reliable.
- The mast and the frame are dividable and exchangeable.
- Full free lifting, fit for low roof house. (3M lift height truck can enter into a 2M door)

SERVICEABILITY

- Low voltage protection setting prolongs the battery using time.
- The electronic components' concentrated design simplifies the circuit and makes easily assemble, debug and maintaining.
- CANbus technology reduces wiring complexity and increase reliability.
- Hall element reduces wear components, resulting in increased component life.

Initial lifting with double-pallet function turn to **P55**

Model	Remarks
KD15K-I	High configuration with proportional valve
KD15K-II	Standard configuration
KD15K-III	Economy type

Conforms to EN ISO 3691-1:2012, EN 1726-1/A1:2010
Based on Directive 2006/42/EC

Conforms to EN 12895:2000
Based on Directive 2004/108/EC

Electric Stacker

SHIGEMITSU
マティアリアル ハンドリング イクィプメンツ

1KG=2.205LB 1INCH=25.40MM

Model		KD15K-I	KD15K-II	KD10K-III	KD12K-III	KD15K-III
Load capacity/rated load	**Q(kg)**	**1500**	**1500**	**1000**	**1200**	**1500**
Load centre distance	c(mm)	600	600	500	500	600
Load distance,centre of drive axle to fork	x(mm)	672	672	697	697	697
Fork height, lowered	h_{13}(mm)	90	90	90	90	90
Tyre size, front	mm	ϕ250x70	ϕ250x70	ϕ250x70	ϕ250x70	ϕ250x70
Tyre size, rear	mm	ϕ80x84	ϕ80x84	ϕ80x70	ϕ80x70	ϕ80x70
Additional wheels(dimensions)	mm	ϕ150x60	ϕ150x60	ϕ150x60	ϕ150x60	ϕ150x60
Wheels,number front rear(x=driven wheels)		1x+2/4	1x+2/4	1x+2/4	1x+2/4	1x+2/4
Height,mast lowered	h_1(mm)	1735/1985/2135/2235/2050/2210/2410	1735/1985/2135/2235/2050/2210/2410	2087/1837/2087/2237		
Free lift (option 2500~3500mm)	h_2(mm)	1300/1550/1700/1800/1570/1740/1940	1300/1550/1700/1800/1570/1740/1940	~		
Max. Lift height	**h_3(mm)**	**2500/3000/3300/3500/4500/5000/5600**	**2500/3000/3300/3500/4500/5000/5600**	**1600/2500/3000/3300**		
Height,mast extended	h_4(mm)	2955/3455/3755/3955/5070/5550/6150	2955/3455/3755/3955/5030/5510/6110	2087/3087/3587/3887		
Initial lift	h_{14}(mm)	1150/1450	1150/1450	1150/1450		
Overall length	l_1(mm)	2020/2100	2020/2100	1955	1955	2025
Length to face of forks	l_2(mm)	950	950	840	840	920
Overall width	b_1(mm)	850	850	850	850	850
Fork dimensions	s/e/l(mm)	60/180/1070(1150)	60/180/1070(1150)	60/170/1070(1150)	60/170/1070(1150)	60/170/1070(1150)
Width overall forks	b_5(mm)	570/695	570/695	580/695	580/695	580/695
Aisle width for pallets 800x1200 lengthways	A_{st}(mm)	2515	2515	2540	2540	2520
Turning radius	W_a(mm)	1655	1655	1575	1575	1655
Travel speed,laden/unladen	Km/h	6.5/6.7	6.5/6.7	6.5/6.7	6.5/6.7	6.5/6.7
Lift speed,laden/unladen	m/s	0-0.12/0-0.19	0.11/0.14	0.06/0.13	0.06/0.13	0.06/0.13
Lowering speed,laden/unladen	m/s	0-0.35/0-0.12	0.12/0.12	0.13/0.10	0.13/0.10	0.13/0.10
Battery voltage,nominal capacity K5	V/Ah	24/300	24/240 24/300	24/120	24/120	24/200
Battery weight	kg	300	220 260	90	90	160
Battery dimensions l/w/h	mm	675x254x540	675x254x500 675x254x540	753x178x240	753x178x240	800x254x320
Service weight (with battery)	kg	1240/1265/1280/1290/1340/1360/1380	(240Ah)1180/1205/1220/1230/1280/1300/1320	650/700/730/750	660/710/740/760	780/830/840/850

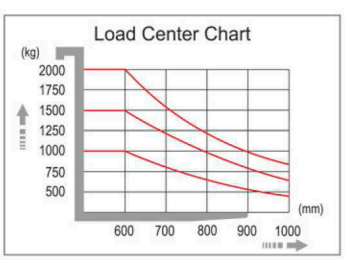

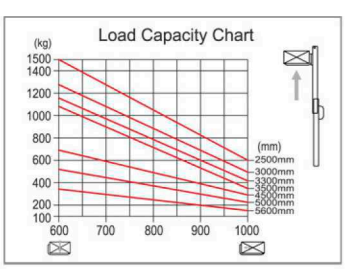

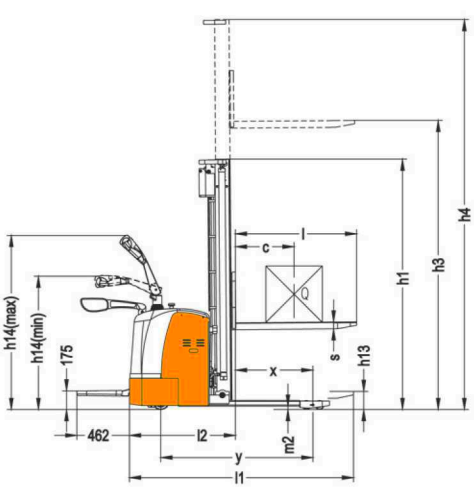

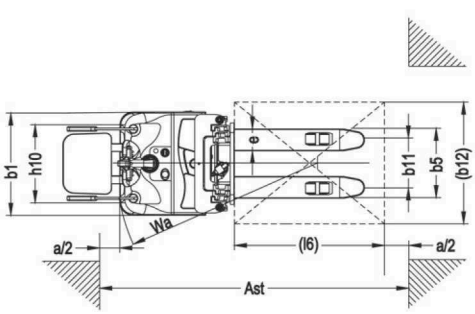

Model: KTK10 KTK12 KTK15

Straddle legs & adjustable forks

AC

EPS (Option)

Advantages:

SAFETY AND PRODUCTIVITY

- AC Motor eliminates replacement of carbon brush.
- Multi-function display with BDI and hour meter.
- Side way battery is easy to maintain.
- Damping cushion for low-noise operation;
- Emergency reversing device in the handle provides higher safety for the whole operation.
- Auto deceleration function makes operation more safely.
- Built-in pressure relief valve protects the trucks from overloads, increases the reliability.
- Braking applied with handle upright and horizontal position, increasing the safety of the truck.
- Emergency power disconnect switch.
- Turtle low speed switch.
- Stepless speed control.

OPTIMUM STRUCTURAL DESIGN:

- Low center of gravity ensures the stable operation.
- Vertical driving wheel ensures convenient maintenance and small turning radius. Water-proof and dust-proof motor structure, keeps the braking and motor more durable and reliable.
- The mast and the frame are dividable and exchangeable.

Electric Stacker

SHIGEMITSU
マティアリアル ハンドリング イクィプメンツ

1KG=2.205LB 1INCH=25.40MM

Model		KTK15-I	KTK15-II	KTK10-III	KTK12-III	KTK15-III
Load capacity/rated load	**Q(kg)**	**1500**	**1500**	**1000**	**1200**	**1500**
Load centre distance	c(mm)	600	600	500	500	600
Load distance,centre of drive axle to fork	x(mm)	677	677	795	795	795
Fork height, lowered	h_{13}(mm)	70	70	70	70	70
Tyre size,front	mm	ϕ250×70	ϕ250×70	ϕ250×70	ϕ250×70	ϕ250×70
Tyre size rear	mm	ϕ80×84	ϕ80×84	ϕ98×82	ϕ98×82	ϕ98×82
Additional wheels(dimensions)	mm	ϕ150×60	ϕ150×60	ϕ150×60	ϕ150×60	ϕ150×60
Wheels,number front rear(x=driven wheels)		1x+2/4	1x+2/4	1x+2/2	1x+2/2	1x+2/2
Height,mast lowered	h_1(mm)	1805/2055/2205/2305/2120/2280/2480	1805/2055/2205/2305/2120/2280/2480	2145/1895/2145/2295		
Free lift (option 2500～3500mm)	h_2(mm)	1300/1550/1700/1800/1570/1740/1940	1300/1550/1700/1800/1570/1740/1940	～		
Max. lift height	**h_3(mm)**	**2500/3000/3300/3500/4500/5000/5600**	**2500/3000/3300/3500/4500/5000/5600**	**1600/2500/3000/3300**		
Height,mast extended	h_4(mm)	3025/3525/3825/4025/5080/5560/6160	3025/3525/3825/4025/5080/5560/6160	2145/3145/3645/3995		
Initial lift	h_{14}(mm)	1150/1450	1150/1450	1150/1450		
Overall length	l_1(mm)	2020/2100	2020/2100	1975	1975	2055
Length to face of forks	l_2(mm)	962	962	890	890	970
Overall width	b_1(mm)	1170-1560	1170-1560	1182-1582	1182-1582	1182-1582
Fork dimensions	s/e/l(mm)	35/100/1070(1150)	35/100/1070(1150)	35/100/1070(1150)	35/100/1070(1150)	35/100/1070(1150)
Width overall forks	b_5(mm)	200-800	200-800	200-800	200-800	200-800
Aisle width for pallets 800x1200 lengthways	A_{st}(mm)	2545	2545	1490	1490	2570
Turning radius	W_a(mm)	1695	1695	1625	1625	1705
Travel speed,laden/unladen	Km/h	6.5/6.7	6.5/6.7	6.5/6.7(AC)	6.5/6.7(AC)	6.5/6.7(AC)
Lift speed,laden/unladen	m/s	0-0.12/0-0.19	0.11/0.14	0.06/0.13	0.06/0.13	0.06/0.13
Lowering speed,laden/unladen	m/s	0-0.35/0-0.12	0.12/0.12	0.13/0.10	0.13/0.10	0.13/0.10
Battery voltage,nominal capacity K5	V/Ah	24/300	24/240(24/300)	24/120	24/120	24/200
Battery weight	kg	260	220(260)	90	90	160
Battery dimensions l/w/h	mm	675x254x500	675x254x500(540)	753x178x240	753x178x240	800x254x320
Service weight (with battery)	kg	1260/1285/1300/1310/1360/1380/1400	1200/1225/1240/1250/1300/1320/1340	650/700/730/750	660/710/740/760	780/830/840/850

Model	Remarks
KTK15-I	High configuration with proportional valve
KTK15-II	Standard configuration
KTK15-III	Economy type

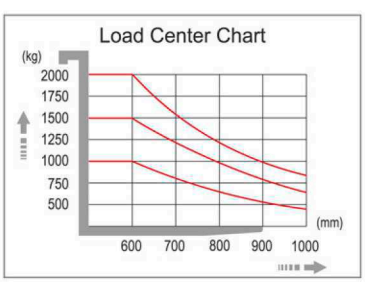

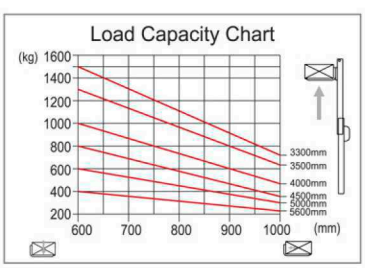

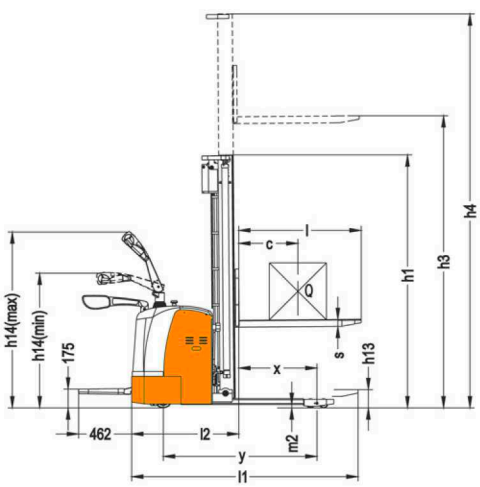

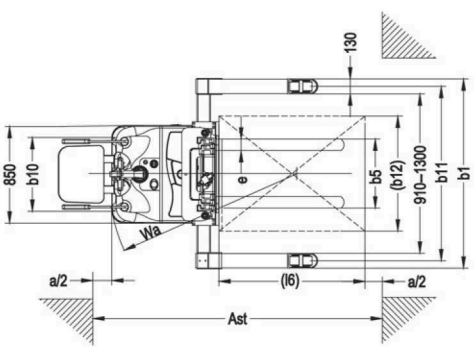

Model: KDK20

Supporting legs

Conforms to EN ISO 3691-1:2012
EN 1726-1/A1:2010
Based on Directive 2006/42/EC

Advantages:

SAFETY AND PRODUNCTIVITY

- AC Motor eliminates replacement of carbon brush.
- Multi-function display with BDI and hour meter.
- Side way battery is easy to maintain.
- Damping cushion for low-noise operation;
- Emergency reversing device in the handle provides higher safety for the whole operation.
- Auto deceleration function makes operation more safely.
- Built-in pressure relief valve protects the trucks from overloads, increases the reliability.
- Braking applied with handle upright and horizontal position, increasing the safety of the truck.
- Emergency power disconnect switch.
- Turtle-shaped low speed switch.
- Stepless speed control.
- Supporting legs in both sides improve the lateral stability of the stacker.

Optimum structural design

- Low center of gravity ensures the stable operation.
- Vertical driving wheel ensures convenient maintenance and small turning radius. Water-proof and dust-proof motor structure, keeps the braking and motor more durable and reliable.
- The mast and the frame are dividable and exchangeable.
- Full free lifting, fit for working in low roof house.

Serviceability

- Low voltage protection setting prolongs the battery use time.
- The electronic components' concentrated design simplify the circuit and makes easy access to assemble, debug and maintain,
- CANbus technology reduces wiring complexity and increase reliability.
- Hall element reduces wear components, resulting in increased component life.

AC

EPS

Electric Stacker

SHIGEMITSU
マティアリアル ハンドリング イクィプメンツ

1KG=2.205LB 1INCH=25.40MM

MODEL		KDK20
Load capacity	**Q(kg)**	**2000**
Load center	c(mm)	600
Load distance	x(mm)	672
Tyre size, front	mm	ϕ 250×70
Tyre size, rear	mm	ϕ 80×84
Additional wheels (dimensions)	mm	ϕ 150×60
Wheels, number front rear(x=driven wheels)		1x+2/4
Height, mast lowered	h1(mm)	1735/1985/2135/2235/2050/2210/2410
Free lift (option)	h2(mm)	1300/1550/1700/1800/1570/1740/1940
Max. Lift height	**h3(mm)**	**2500/3000/3300/3500/4500/5000/5600**
Height, mast extended	h4(mm)	2955/3455/3755/3955/5070/5550/6150
Initial lift	h14(mm)	1150/1450
Fork height, lowered	h13(mm)	90
Overall length	l1(mm)	2020/2100
Length to face of forks	l2(mm)	950
Overall width	b1(mm)	850
Fork dimensions	s/e/l(mm)	60/180/1070(1150)
Width overall forks	b5(mm)	570/695
Aisle width for pallets 800x1200 lengthways	Ast(mm)	2515
Turning radius	Wa(mm)	1655
Travel speed, laden/unladen	Km/h	5.8/6
Lift speed, laden/unladen	m/s	0.09/0.11
Lowering speed, laden/unladen	m/s	0.12/0.11
Battery voltage, nominal capacity K5	V/Ah	24/300
Battery weight	kg	300
Battery dimensions l/w/h	mm	675×254×500
Service weight(with battery)	kg	1550

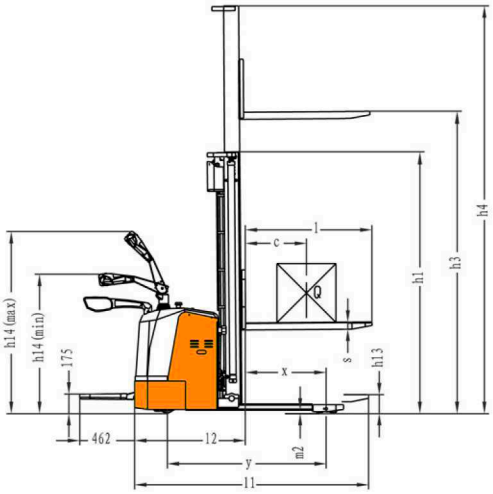

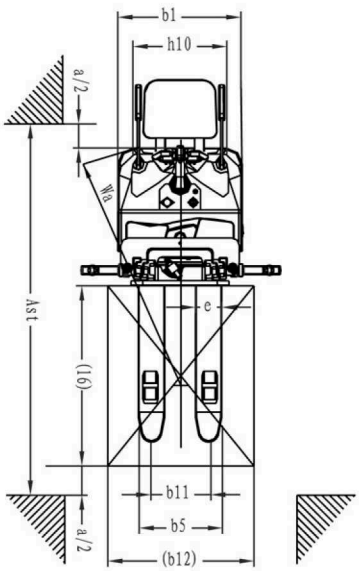

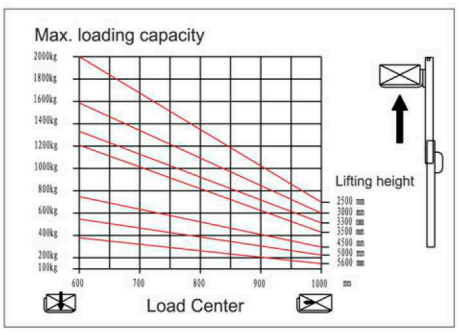

SHIGEMITSU
マティアリアル ハンドリング イクィプメンツ

Model: KD20M

Triplex Mast

Heavy Duty

Lifting Height from 4.5M to 5.8M

Advantages:

SAFETY AND PRODUCTIVITY:

- Emergency reversing device.
- Built-in pressure relief valve protects the truck from overloads.
- Emergency power disconnect.
- Low speed switch in the handle.
- Stepless speed control.
- Folding rubber platform & guards to keep safe & fatigue free.

STRUCTURAL:

- The side located cylinders provides operators a wide view and ensures structural stability.
- Spring-loaded castors improve lateral stability on uneven floors and enhance truck performance and service life.
- Imported steel for the mast from Germany.
- Supporting legs.

SERVICEABILITY:

- Low voltage protection setting prolongs the battery use time.
- CANbus technology reduces wiring complexity and increases reliability.

Remarks:

Heavy duty type Stacker, the full free lifting is only available for lift height from 4.5M to 5.6M.

Max lifting height	Free lifting height
4500mm	1620mm
5000mm	1780mm
5600mm	1980mm

Conforms to EN ISO 3691-1:2012
EN 1726-1/A1:2010
Based on Directive 2006/42/EC

Electric Stacker

SHIGEMITSU
マティアリアル ハンドリング イクィプメンツ

1KG=2.205LB 1INCH=25.40MM

Model		KD20M			
Load capacity	**Q(kg)**	**2000**	**2000**	**2000**	**2000**
Load centre distance	c(mm)	500	500	500	500
Load distance, centre of drive axle to fork	x(mm)	870	870	870	870
Fork height, lowered	h_{13}(mm)	90	90	90	90
Tyre size, front	mm	ϕ250x80	ϕ250x80	ϕ250x80	ϕ250x80
Tyre size, rear	mm	ϕ80x70	ϕ80x70	ϕ80x70	ϕ80x70
Additional wheels(dimensions)	mm	ϕ150x60	ϕ150x60	ϕ150x60	ϕ150x60
Wheels, number front rear(x=driven wheels)		1x+2/4	1x+2/4	1x+2/4	1x+2/4
Height, mast lowered	h_1(mm)	2087	2337	2407	2507
Max. lift height	**h_3(mm)**	**4500**	**5300**	**5500**	**5800**
Height, mast extended	h_4(mm)	5055	5823	6033	6333
Overall length	l_1(mm)	1955	1955	1955	1955
Length to face of forks	l_2(mm)	805	805	805	805
Overall width	b_1(mm)	1220.8-1630	1220.8-1630	1220.8-1630	1220.8-1630
Fork dimensions	s/e/l(mm)	60/170/1070(1150)	60/170/1070(1150)	60/170/1070(1150)	60/170/1070(1150)
Width overall forks	b_5(mm)	580/695	580/695	580/695	580/695
Aisle width for pallets 800x1200 lengthways	A_{st}(mm)	2401	2401	2401	2401
Turning radius	W_a(mm)	1629	1629	1629	1629
Travel speed, laden/unladen	Km/h	4.5/5.6	4.5/5.6	4.5/5.6	4.5/5.6
Lift speed, laden/unladen	m/s	0.09/0.11	0.09/0.11	0.09/0.11	0.09/0.11
Lowering speed, laden/unladen	m/s	0.12/0.09	0.12/0.09	0.12/0.09	0.12/0.09
Battery voltage,nominal capacity K_5	V/Ah	24/275	24/275	24/275	24/275
Battery weight	kg	268	268	268	268
Battery dimensions l/w/h	mm	968x206x505	968x206x505	968x206x505	968x206x505
Service weight(with battery)	kg	1450	1630	1640	1655

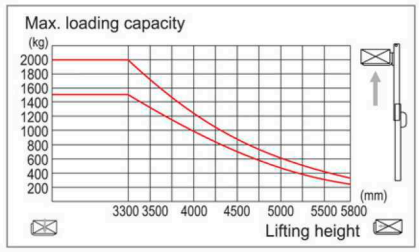

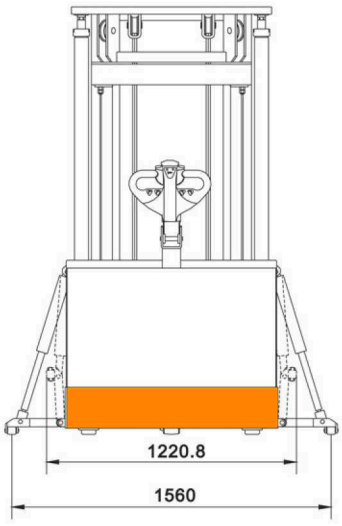

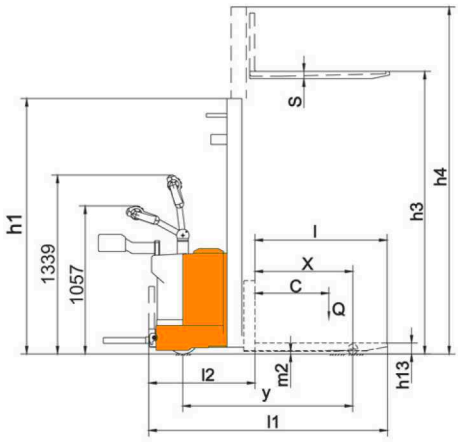

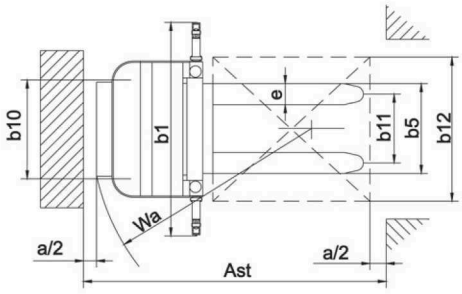

Electric Stacker

SHIGEMITSU
マティアリアル ハンドリング イクィプメンツ

Model:
KDRD10
KDRD12

Single Column Walkie Stacker with wide view mast and low service weight, mainly used in airports, supermarkets, small warehouses and logistics center, suit for indoor and outdoor use and short-distance traveling operation. Particularly for low-force withstanding floors.

Conforms to EN ISO 3691-1:2012
EN 1726-1/A1:2010
Based on Directive 2006/42/EC

Conforms to EN 12895:2000
Based on Directive 2004/108/EC

Electric Stacker

SHIGEMITSU
マティアリアル ハンドリング イクィプメンツ

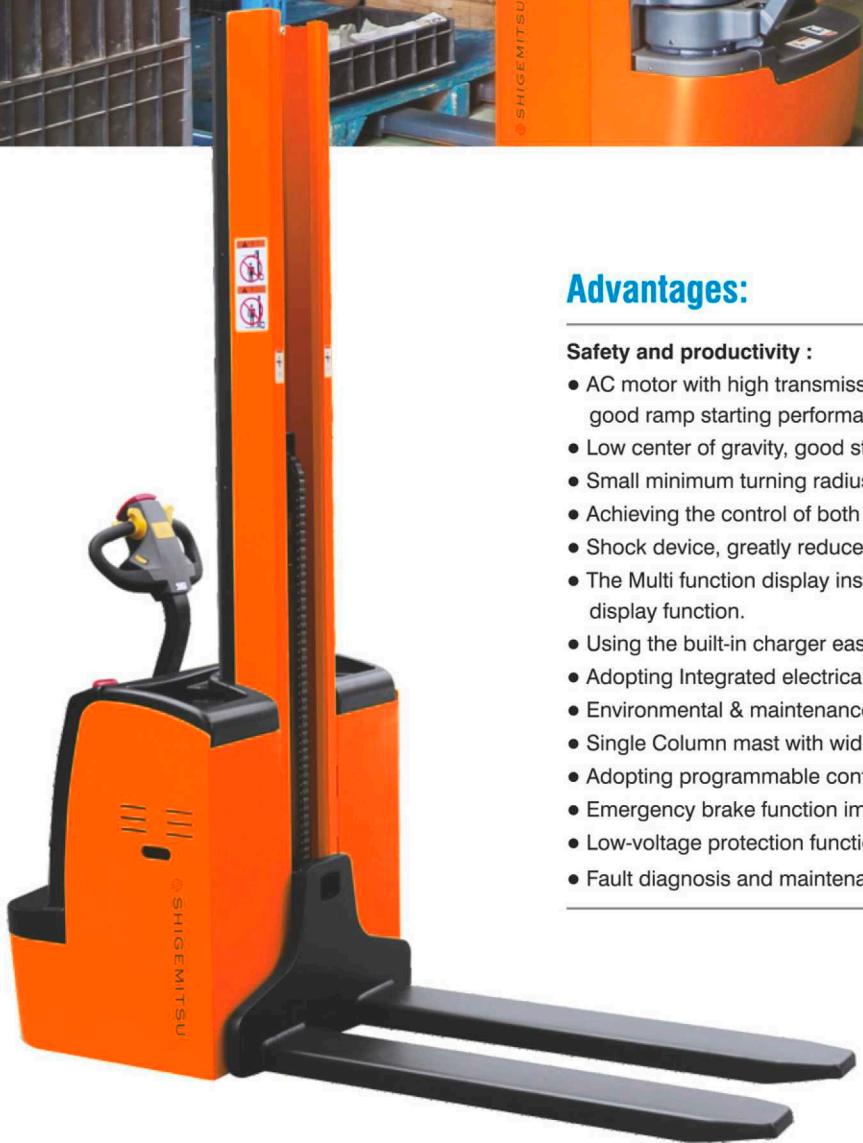

Advantages:

Safety and productivity :

- AC motor with high transmission efficiency, without replacing the carbon brushes, a good ramp starting performance.
- Low center of gravity, good stability and smooth running.
- Small minimum turning radius and excellent steering operating performance.
- Achieving the control of both the walking speed and the lifting speed.
- Shock device, greatly reduce the noise.
- The Multi function display instrument with BDI, fault code, working time and speed display function.
- Using the built-in charger easy to disassembly according to different requirement.
- Adopting Integrated electrical system, wiring easy to assembly and maintain.
- Environmental & maintenance-free lead-acid battery.
- Single Column mast with wide view for operation.
- Adopting programmable control technology with fault diagnostic function.
- Emergency brake function improve the safety operation.
- Low-voltage protection function.
- Fault diagnosis and maintenance functions.

1KG=2.205LB 1INCH=25.40MM

Model		KDRD10	KDRD12
Capacity	**Q(kg)**	**1000**	**1200**
Load center	c(mm)	600	600
Front hanging distance	x(mm)	630	630
Tyre size, front	mm	φ250×70	φ250×70
Tyre size, rear	mm	φ80×70	φ80×70
Additional wheels(dimensions)	mm	φ150×60	φ150×60
Wheels, number front rear(x=driven wheels)		1x+1/4	1x+1/4
Height, mast lowered	h_1(mm)	1980/2330	1980/2330
Max. lift height	**h_3(mm)**	**1600/1950**	**1600/1950**
Height, mast extended	h_4(mm)	1980/2330	1980/2330
Height of tiller in drive position min./max.	h_{14}(mm)	670/1300	670/1300
Height, lowered	h_{13}(mm)	90	90
Overall length	l_1(mm)	1780/1860	1780/1860
Length to face of forks	l_2(mm)	708	708
Overall width	b_1(mm)	820	820
Fork dimensions	s/e/l(mm)	60/170/1070(1150)	60/170/1070(1150)
Width overall forks	b_5(mm)	570	570
Aisle width for pallets 800x1200 lengthways	A_{st}(mm)	2220	2220
Turning radius	W_a(mm)	1338	1338
Travel speed,laden/unladen	Km/h	5.3/5.6	5.3/5.6
Lift speed,laden/unladen	m/s	0.11/0.19	0.11/0.19
Lowering speed,laden/unladen	m/s	0.16/0.11	0.16/0.11
Battery voltage,nominal capacity K5	V/Ah	24/65	24/80
Battery weight	kg	48	50
Battery dimensions l/w/h	mm	255×165×230	255×165×230
Service weight (with battery)	kg	580	590

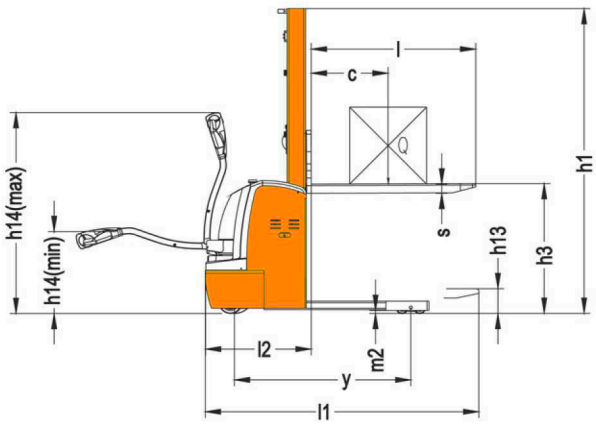

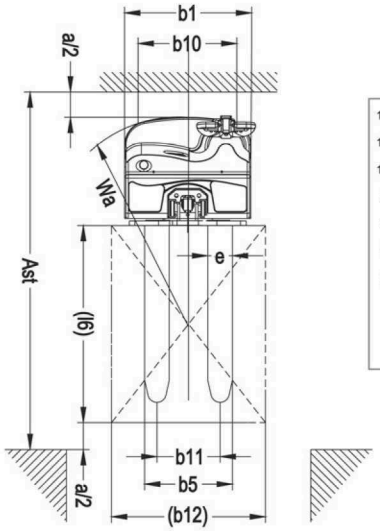

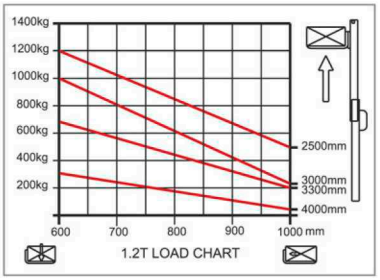

Electric Stock Tractor

SHIGEMITSU
マティアリアル ハンドリング イクィプメンツ

Model: TCD25R

TCD25R Stock Tractor is featuring a 264x181mm/10.4x7.1inch cargo deck and 2200kgs/4840lbs towing capacity, which is built to work its way through the narrow aisles place ,widely used in factory, dock and warehouse .

Advantages:

- Small & exquisite figure, low noise, environmentally friendly.
- Narrow body of small turning radius, especially suitable for narrow aisle.
- Available with optional ladder on the back for picking orders from the second and third shelf level. 4 step ladder and 6 step ladder allows operator to pick up goods from high places quickly and easily .
- With rubber mat in the front compartment, avoid hitting the knee of operator during operation.
- The single pedal for accelerator and brake ,safety and easy to operate .
- The ergonomics steering console is easily for operator to place packages from the shelves to the platform without interference from the console or the steering wheel.
- With H type driving axle, makes truck operation in high stability; and it is easy and convenient for the replacement and maintenance of the driving wheel.
- Combining hand brake with foot brake, which improves the safety performance of the truck.

1KG=2.205LB 1INCH=25.40MM

MODEL		TCD25R
Drive type		battery
Operate type		standing
Rated traction weight	**kg/lbs**	**2200/4840**
Length	mm/inch	2224/88
Width	mm/inch	770/30.3
Backrest height	mm/inch	1381/54
Ladder height	mm/inch	2815/111
Height of deck	mm/inch	627/24.7
Deck size	mm/inch	1420x770/56x30.3
Turning radius	mm/inch	1280/50.4
Travel speed, unladen/laden	kw/h	12/7
Wheels,number front rear(x=driven wheels)		1/2x
Tyre size front/rear		15×4½-8
Load capacity	kg/lbs	450/990
Battery voltage/nominal capacity	V/AH	24/210
Service weight	kg/lbs	560/1235

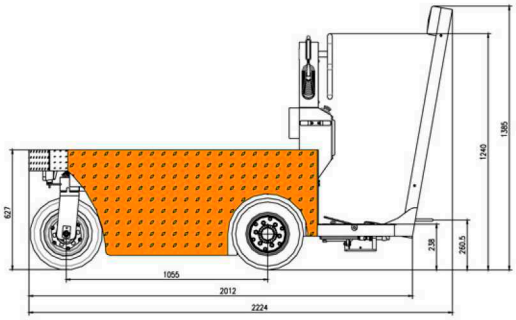

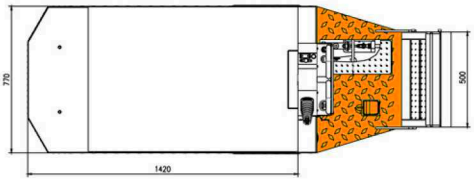

Electric Cart

SHIGEMITSU
マティアリアル ハンドリング イクィプメンツ

Model: TC05

Designed for versatile application, with tough and dependable solution. Provide transportation for executive, supervisors, security and other workers whose job keeps them on the go .

Advantages:

- Combining personnel carrier to burden carrier in one truck. With carry capacity of two people or 300kgs (660lbs) of load on the job site .
- Truck body is with steel welded structures, the unitized body and frame prolong the using time .
- With small body easy to operate, driver won't feel tired after operating for a long time.
- With ergonomics bucket seat with disassembled back rest, it is comfortable and convenient for two people use.
- Multi-function display with BDI , hour meter, fault code .
- Use DC brushless motor with perfect traction performance, avoid changing carbon brush in the general motors.

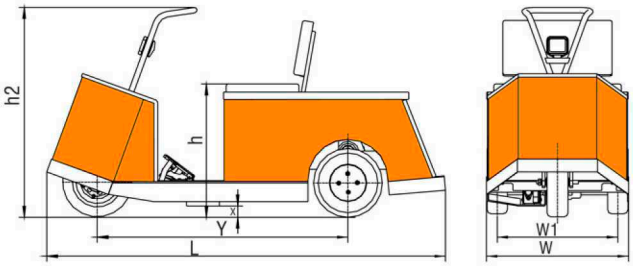

1KG=2.205LB 1INCH=25.40MM

Model		TC05
Drive type		battery
Load capacity	**Q(kg/lbs)**	**500/1100**
Rated traction weight	kg/lbs	1000/2200
Travel speed(unladen/laden)	Km/h	14/8
Unladen onward distance	Km	32
Service weight(with battery)	kg/lbs	470/1036
Tyre size		15x4½-8
Wheel number,front/rear(X=driven wheels)		1/2x
Operating handle height	h_2(mm/inch)	1100/43
Seat height	h(mm/inch)	730/28.7
Overall length	L(mm/inch)	2190/86
Overall width	W(mm/inch)	780/30.7
Min.ground height	X(mm/inch)	63/2.5
Turning radius	Wa(mm/inch)	1850/73
Battery voltage/Nominal capacity	V/Ah	24/210
Battery weight	kg/lbs	96/212

Electric Straddle Stacker

SHIGEMITSU
マティアリアル ハンドリング イクィプメンツ

Model:
KTR10
KTR12
KTR15

Straddle legs with adjustable forks

AC

Advantages:

STRUCTURAL AND SAFETY:

- Advanced AC control system intelligentized regenerative brake system.
- Multi-function display with BDI and hour meter.
- Emergency reversing device.
- Auto deceleration system utilizes regenerative braking.
- Built-in pressure relief valve protects the trucks from overloads.
- Emergency power disconnect .
- Stepless speed control.
- With lifting limit switch to shut off pump motor at top max. lifting height.
- Small turning radius standing drive motor system, water-proof and dust-proof motor structure.

SERVICEABILITY:

- CANbus technology reduces wiring complexity.
- Side-way battery with roll-out system, convenient for replacement.

Model	Remarks
KTR15-I	High configuration with proportional valve
KTR15-II	Standard configuration
KTR15-III	Economy type

1KG=2.205LB 1INCH=25.40MM

Model		KTR15-I	KTR15-II	KTR10-III	KTR12-III	KTR15-III
Load capacity/rated load	**Q(kg)**	**1500**	**1500**	**1000**	**1200**	**1500**
Load centre distance	c(mm)	600	600	500	500	600
Load distance,centre of drive axle to fork	x(mm)	677	677	795	795	795
Fork height, lowered	h_{13}(mm)	70	70	90	90	90
Tyre size, front	mm	Φ250×70	Φ250×70	Φ250×70	Φ250×70	Φ250×70
Tyre size, rear	mm	Φ80×84	Φ80×84	Φ98×82	Φ98×82	Φ98×82
Additional wheels(dimensions)	mm	Φ150×60	Φ150×60	Φ150×60	Φ150×60	Φ150×60
Wheels,number front rear(x=driven wheels)		1x+1/4	1x+1/4	1x+1/2	1x+1/2	1x+1/2
Mast height lowered	h_1(mm)	1805/2055/2205/2305/2120/2280/2480	1805/2055/2205/2305/2120/2280/2480		2145/1895/2145/2295	
Free lift (option 2500~3500mm)	h_2(mm)	1300/1550/1700/1800/1570/1740/1940	1300/1550/1700/1800/1570/1740/1940		~	
Max. lift height	**h_3(mm)**	**2500/3000/3300/3500/4500/5000/5600**	**2500/3000/3300/3500/4500/5000/5600**		**1600/2500/3000/3300**	
Mast height extended	h_4(mm)	3025/3525/3825/4025/5080/5560/6160	3025/3525/3825/4025/5080/5560/6160		2145/3145/3645/3995	
Height of tiller in drive position min./max.	h_{14}(mm)	670/1300	670/1300	670/1300	670/1300	670/1300
Overall length	l_1(mm)	1980	1980	2015	2015	2095
Length to face of forks	l_2(mm)	915	915	890	890	970
Overall width	b_1(mm)	1170-1560	1170-1560	1182-1582	1182-1582	1182-1582
Fork dimensions	s/e/l(mm)	35/100/1070(1150)	35/100/1070(1150)	35/100/1070(1150)	35/100/1070(1150)	35/100/1070(1150)
Width overall forks	b_5(mm)	200-800	200-800	200-800	200-800	200-800
Aisle width for pallets 800x1200 lengthways	A_{st}(mm)	2465	2465	2420	2420	2500
Turning radius	W_a(mm)	1610	1610	1575	1575	1655
Travel speed,laden/unladen	Km/h	5.8/6	5.8/6	5.3/5.6	5.3/5.6	5.8/6(AC)
Lift speed,laden/unladen	m/s	0--0.12/0--0.19	0.11/0.14	0.06/0.13	0.06/0.13	0.06/0.13
Lowering speed,laden/unladen	m/s	0--0.35/0--0.12	0.12/0.12	0.13/0.10	0.13/0.10	0.13/0.10
Battery voltage,nominal capacity K_5	V/Ah	24/300	24/240	24/120	24/120	24/200
Battery weight	kg	260	220	90	90	160
Battery dimensions l/w/h	mm	675x254x500	675x254x500	753x178x240	753x178x240	800x254x320
Service weight (with battery)	kg	1500/1525/1540/1550/1600/1620/1640	1400/1425/1440/1450/1500/1520/1540	740/790/820/840	750/800/830/850	940/990/1000/1010

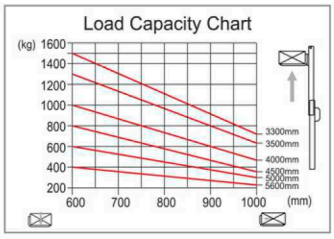

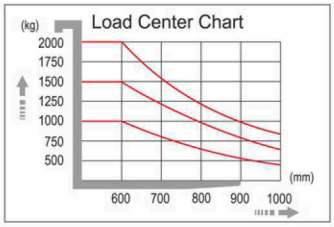

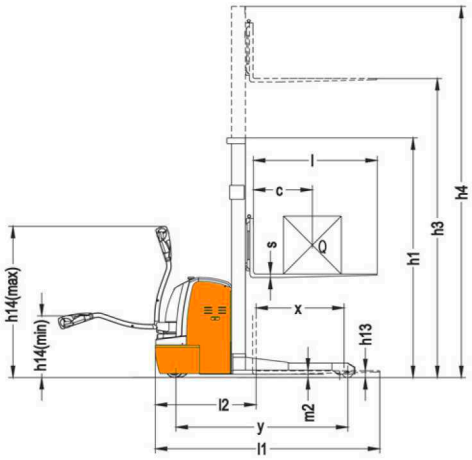

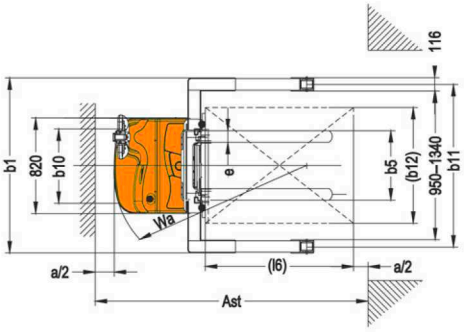

Electric Tow Tractor

SHIGEMITSU
マティアリアル ハンドリング イクィプメンツ

Model:
TCD SERIES

Capacity: 2 Ton ~ 10 Ton

Advantages:

SAFETY AND STABILITY:

- Multi-function display: battery status, hour meter, error code etc.
- The application of hand brake and hydraulic brake improve the safety level.
- Stepless speed control.
- Equipped with adjustable steering wheel, adapted to different operators.
- Advanced link system, oriented and fixed bracket.
- Low noise.

STRUCTURAL:

- "H" type axle design gives a good stability.
- Batteries located in the lowest part of frame, low center of gravity ensures excellent stability.
- Automatic reset make operation easier.

SERVICEABILITY:

- CANbus technology reduces wiring complexity and increase reliability.
- Easy-open back cover to open for maintenance and replacement of parts such as drive wheel, oil tube, accelerator, controller etc.

OPTION:

- Cabin
- Double front lamp
- AC power system
- **TCD20,TCD30** side way battery
- EPS system

Back cover easy to open for service.

Large capacity batteries located in the lowest part of frame , offers low centre of gravity.

Adjustable steering column with electric F/R lever.

Multi function display

1KG=2.205LB 1INCH=25.40MM

Model		TCD20	TCD30	TCD50	TCD60	TCD100
Drive type		battery	battery	battery	battery	battery
Rated traction weight(60 minutes rated)	**kg**	**2000**	**3000**	**5000**	**6000**	**10000**
Rated traction(60 minutes rated)	N/kg	500/50	750/75	1250/125	1500/150	2500/250
Max. traction(5 minutes rated)	N/kg	2000/200	3000/300	5000/500	6000/600	10000/1000
Drawbar center height	h1/h2(mm)	280/350	280/350	280/350	280/350	320/400
Weight	kg	930	980	1160	1280	1160
Axle loading, front	kg	330	350	410	450	750
Axle loading, rear	kg	600	630	750	830	1440
Tyre number front/rear	X＝Driven wheels	1/2X	1/2X	1/2X	1/2X	2/2X
Tyre size, front	solid rubber	15*4½-8	15*4½-8	15*4½-8	15*4½-8	5.00-8-10PR
Tyre size, rear	solid rubber	15*4½-8	15*4½-8	4.00-8	4.00-8	6.50-10-12PR
Rear hanging distance	L2(mm)	350	350	450	450	600
Seat height	h3(mm)	850	850	910	910	1050
Overall length	L (mm)	1720	1720	1940	1940	2485
Overall width	W(mm)	970	970	1100	1100	1160
Overall height	h (mm)	1250	1250	1250	1250	1480
Min. ground height	X (mm)	100	100	100	100	138
Min. turning radius	Wa (mm)	1519	1519	1650	1650	2200
Travel speed, laden	km/h	8	7	8	7	6.5
Travel speed, unladen	km/h	13	13	14	14	12
Battery voltage,nominal capacity K5	V/Ah	48/240	48270	48/360	48/400	48
Battery weight	kg	350	400	530	610	950
Traction bolt		Traction bolt	Traction bolt	Traction bolt	Traction bolt	Traction bolt

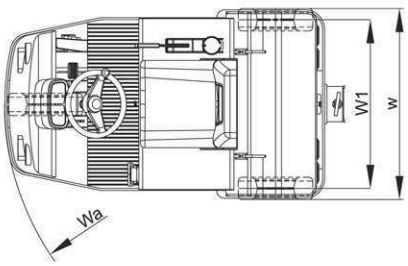

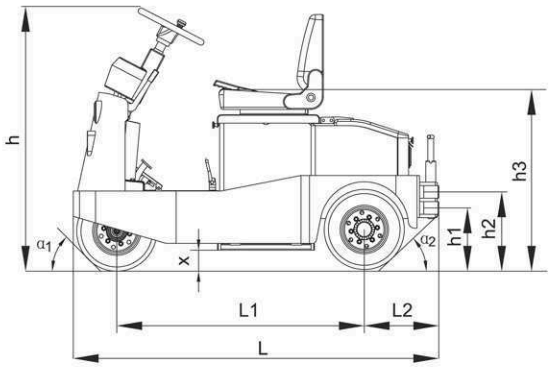

Technical parameters of trailer

Model		TG30	TG60	TG100
Capacity	Kg	3000	6000	10000
Weight	Kg	350	450	550
Platform height	mm	500	560	560
Outline dimension(L x W x H)	mm	2550x1000x1100	3320x1250x1180	3500x1500x1180
Platform size	mm	1800x1000	2500x1250	2500x1500
Wheel dimension	mm	15x4½-8	16x6x10½	16x6x10½
Drawbar height	mm	200	200	280
Min.ground clearance	mm	170	180	180
Tractor model for choice		TCD20, TCD30	TCD50, TCD60	TCD100

- Cargo loading platform are available in different size as customer special requirements.

Hand Pallet Truck

SHIGEMITSU
マティアリアル ハンドリング イクィプメンツ

Model: **PK**

SHIGEMITSU
マティアリアル ハンドリング イクィプメンツ

1KG=2.205LB 1INCH=25.40MM

Model		PK	
Capacity	Q(kg)	2500/3000	2500/3000
Lowered fork height	h_{13}(mm)	85	75
Steering wheel	mm	ϕ200	ϕ180
Fork wheel single	mm	ϕ80x93	ϕ74x93
Fork wheel tandem	mm	ϕ80x70	ϕ74x70
Max. lift height	h_3(mm)	200	190
Total height	h_{14}(mm)	1224	1214
Overall length	l_1(mm)	1483/1533/1603	1483/1533/1603
Fork length	l (mm)	1100/1150/1220	1100/1150/1220
Width overall forks	b_5(mm)	520/550/685	520/550/685
Ground clearance, centre of wheelbase	m_2(mm)	40	30
Aisle width for pallets 1000x1200 crossways	A_{st}(mm)	1683/1733/1803	1683/1733/1803
Aisle width for pallets 800x1200 lengthways	A_{st}(mm)	1783/1783/1803	1783/1783/1803
Turning radius	W_a(mm)	1216/1266/1336	1216/1266/1336
Service weight	kg	63-75	63-75

CERTIFIED OVER 60,000 CYCLES
3 YEAR WARRANTY
PUMP

Innovative design, comprehensive testing and highest quality !

- Most standard and popular model with capacity 2500 - 3000kgs.
- With Copping Supporting NOG & strengthening ribbing under top triangle cover.
- Complete pump design with reliable leak-proof pump eliminating maintenance and extending the service time.
- 210 steering arc, and small turning radius.
- Fork Lowering speed is controllable, operated by hand control and foot pedal.
- Entry / exit roller, more freely travel.
- Equipped with over-load valve, with long service time.
- 3 position hand control - Raise, Lower, Neutral.
- 12 lubrication grease nipples on all movable parts for easy maintenance.
- Adjustable pump cap ensures a long service life.
- Ergonomic large rubber handle with three control lever.
- Option: 1) Nylon wheel, polyurethane wheel, rubber wheel, single fork roller or tandem fork rollers.
  2) Fork length: 800mm, 900mm, 1000mm.
  3) Foot pedal release.
  4) Pump color: black painting, silver painting, silver galvanized.

Option: fully rubber wrapped handle

Adjustable pump cap

Adjustable straight tappet

TÜV SÜD GS geprüfte Sicherheit CE

Conforms to EN ISO3691-5:2014
Based on Directive 2006/42/EC

Professional

(mm)

Remark: Special size fork width and length can be made according to customer's requirement.

Hand Pallet Truck

SHIGEMITSU
マティアリアル ハンドリング イクィプメンツ

Model: **PK-III**

1KG=2.205LB 1INCH=25.40MM

Model		PK-III	
Capacity	Q(kg)	2500	2500
Lowered fork height	h_{13}(mm)	85	75
steering wheel	mm	ϕ180	ϕ180
fork wheel single	mm	ϕ74x93	ϕ74x93
fork wheel double	mm	ϕ74x70	ϕ74x70
Max. Lifting height	h_3(mm)	195	185
Height of tiller in drive position min./max.	h_{14}(mm)	1214	1214
Overall length	l_1(mm)	1543/1613	1543/1613
Fork length	l (mm)	1150/1220	1150/1220
Width overall forks	b_5(mm)	520/550/685	520/550/685
Ground clearance, center of wheelbase	m_2(mm)	32	22
Aisle width for pallets 1000x1200 crossways	A_{st}(mm)	1743/1813	1743/1813
Aisle width for pallets 800x1200 lengthways	A_{st}(mm)	1793/1813	1793/1813
Turning radius	W_a(mm)	1276/1346	1276/1346
Service weight	kg	58-70	58-70

Remark: Special size fork width and length can be made according to customer's requirement.

Hot Sale

Conforms to EN ISO3691-5:2014
Based on Directive 2006/42/EC

Pump

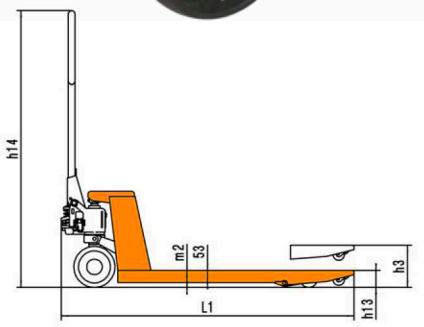

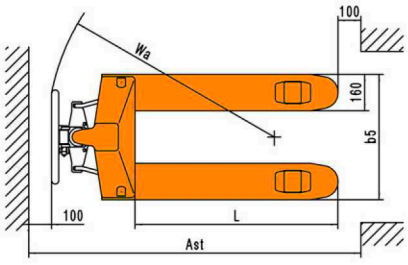

(mm)

Hand pallet truck

- Integrated pump without welding , no any leaking problems.
- Frame force is more reasonable , and the strength is more reliable.
- Handle seat has hole it is more convenient for installation of control chain.
- Forks lowering speed is controllable, with overload valve to avoid overloading .
- Option: 1) steering wheel 200mm (fork wheel 80mm) are available.
  2) Nylon wheel, polyurethane wheel, rubber wheel, single fork roller or tandem fork rollers.
  3) Fork length: 800mm, 900mm, 1000mm, 1100mm.
  4) Foot pedal release.
  5) Pump color: black painting.
  6) Quick lift (double speed lifting).

Model: PB

1KG=2.205LB 1INCH=25.40MM

Model		PB
Capacity	Q(kg)	2000
Lowered fork height	h_{13}(mm)	75
Steering wheel	mm	ϕ160
Fork wheel single	mm	ϕ70x80
Fork wheel tandem	mm	ϕ70x60
Max. lift height	h_3(mm)	190
Total height	h_{14}(mm)	1176.5
Overall length	l_1(mm)	1520/1590
Fork length	l (mm)	1150/1220
Width overall forks	b_5(mm)	520/550/680
Ground clearance, centre of wheelbase	m_2(mm)	22
Aisle width for pallets 1000x1200 crossways	A_{st}(mm)	1720/1790
Aisle width for pallets 800x1200 lengthways	A_{st}(mm)	1770/1790
Turning radius	W_a(mm)	1265/1335
Service weight	kg	55-60

Remark: Special size fork width and length can be made according to customer's requirement.

Conforms to EN ISO3691-5:2014
Based on Directive 2006/42/EC

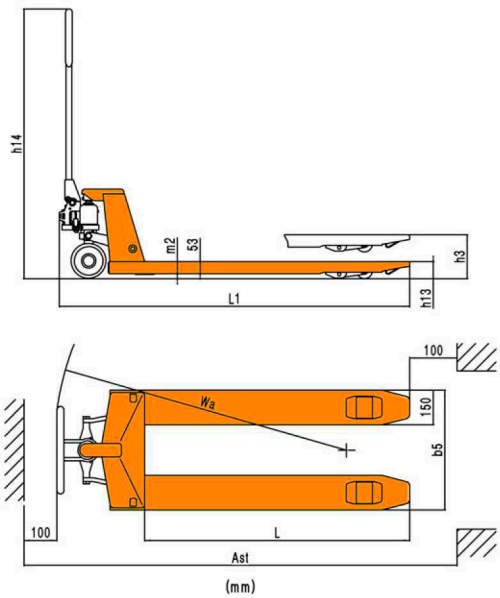

Economic design pallet truck

- Standard epoxy powder coat finish which is resistant to chips and normal corrosion.
- Exceptionally strong but light weight steel construction, service weight is only 55kgs.
- With welded joints and reinforced fork tips for most durability in the toughest applications.
- 3 position hand control - Raise, Lower, Neutral.
- Excellent turning angle of 190 degrees facilities.
- Number of pump strokes 12 times, lift height per stroke 11mm.
- Reliable oil leak-proof hydraulic system.
- Option: 1) Nylon wheel, polyurethane wheel, rubber wheel, single fork roller or tandem fork rollers.
  2) Fork length: 800mm, 900mm, 1000mm,1100mm.

Hand Pallet Truck

SHIGEMITSU
マティアリアル ハンドリング イクィプメンツ

Model: PKA 3000KG

1KG=2.205LB 1INCH=25.40MM

Model		PKA	
Capacity	Q(kg)	2000/2500/3000	
Lowered fork height	h_{13}(mm)	85	75
Steering wheel	mm	ϕ200	ϕ180
Fork wheel single	mm	ϕ80x93	ϕ74x93
Fork wheel tandem	mm	ϕ80x70	ϕ74x70
Max. lift height	h_3(mm)	200	190
Total height	h_{14}(mm)	1232	1222
Overall length	l_1(mm)	1533/1603	1533/1603
Fork length	l (mm)	1150/1220	1150/1220
Width overall forks	b_5(mm)	520/550/685	520/550/685
Ground clearance, centre of wheelbase	m_2(mm)	32	22
Aisle width for pallets 1000x1200 crossways	A_{st}(mm)	1733/1803	1733/1803
Aisle width for pallets 800x1200 lengthways	A_{st}(mm)	1783/1803	1783/1803
Turning radius	W_a(mm)	1265/1335	1265/1335
Service weight	kg	55-70	55-70

Conforms to EN ISO3691-5:2014
Based on Directive 2006/42/EC

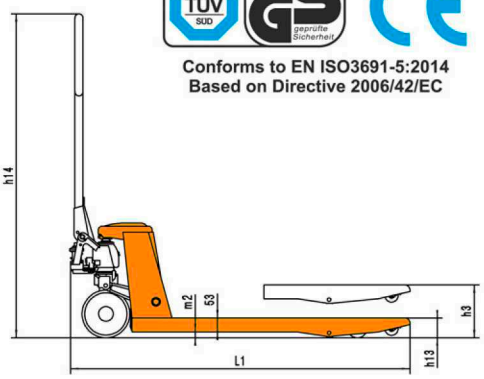

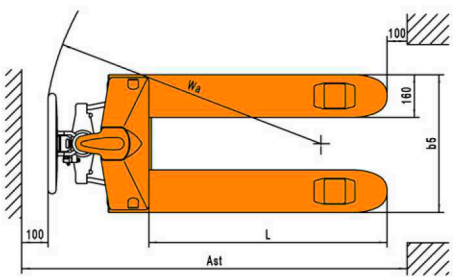

(mm)

Excellent type pallet truck

- Standard single speed pump and light service weight, but big load capacity 3000kgs.
- Design on the base of 3 years service time, which can be extended up to 5 years.
- Compact appearance, complete rocker arms, ensure the whole truck averaged pressed.
- Full sealed pump, easy to maintain.
- Simplified spare parts, higher performance with low repair cost.
- Option: 1) Double Speed Pump.
  2) Nylon wheel, polyurethane wheel, rubber wheel, single fork roller or tandem fork rollers.
  3) Fork length: 800mm, 900mm, 1000mm,1100mm.

Model: **PF-III**

1KG=2.205LB 1INCH=25.40MM

Model		PF		PF-III	
Capacity	Q(kg)	2500/3000	2500/3000	2500	2500
Lowered fork height	h_{13}(mm)	85	75	85	75
Steering wheel	mm	ϕ180	ϕ180	ϕ180	ϕ160
Fork wheel single	mm	ϕ80x93	ϕ74x93	ϕ70x80	ϕ70x80
Fork wheel tandem	mm	ϕ80x70	ϕ74x70	ϕ70x60	ϕ70x60
Max. lift height	h_3(mm)	195	185	200	190
Total height	h_{14}(mm)	1233.5	1223.5	1186.5	1176.5
Overall length	l_1(mm)	1528.5/1598.5	1528.5/1598.5	1520/1590	1520/1590
Fork length	l (mm)	1150/1220	1150/1220	1150/1220	1150/1220
Fork width	e(mm)	160	160	150	150
Width overall forks	b_5(mm)	520/550/685	520/550/685	520/550/680	520/550/680
Ground clearance, centre of wheelbase	m_2(mm)	32	22	32	22
Aisle width for pallets 1000x1200 crossways	A_{st}(mm)	1728.5/1798.5	1728.5/1798.5	1720/1790	1720/1790
Aisle width for pallets 800x1200 lengthways	A_{st}(mm)	1778.5/1798.5	1778.5/1798.5	1770/1790	1770/1790
Turning radius	W_a(mm)	1244.5/1314.5	1244.5/1314.5	1265/1335	1265/1335
Service weight	kg	65-77	65-77	55-60	55-60

Remark: (1) Capacity 2000kg available.
(2) Special size fork width and length can be made according to customer's requirement.

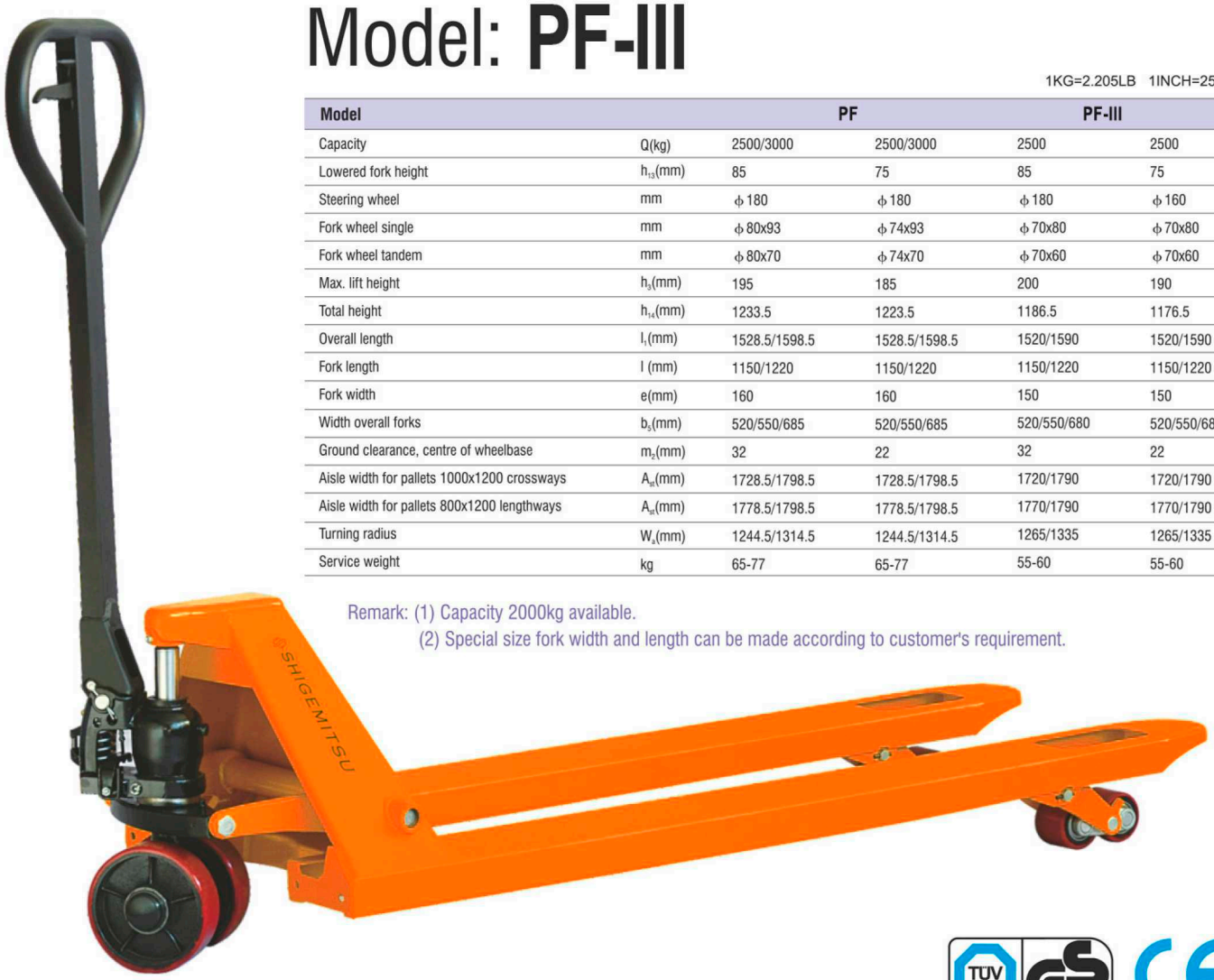

Conforms to EN ISO3691-5:2014
Based on Directive 2006/42/EC

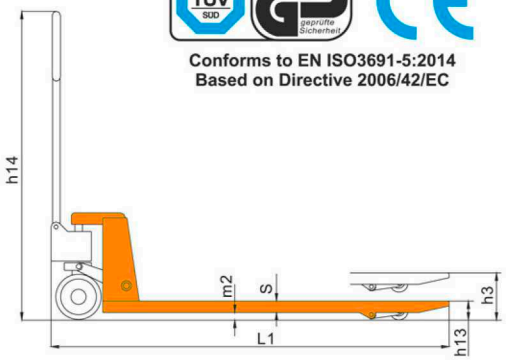

Standard type pallet truck

- Chrome piston and ram for smooth operation and prevents excessive wear on the pump & seal.
- Excellent turning angle of 180 degrees facilities.
- Number of pump strokes-10. Lift height per stroke:11mm.
- Option: 1) Nylon wheel, polyurethane wheel, rubber wheel, single fork roller or tandem fork rollers.
  2) Fork length: 800mm, 900mm, 1000mm.

Model: **PF**

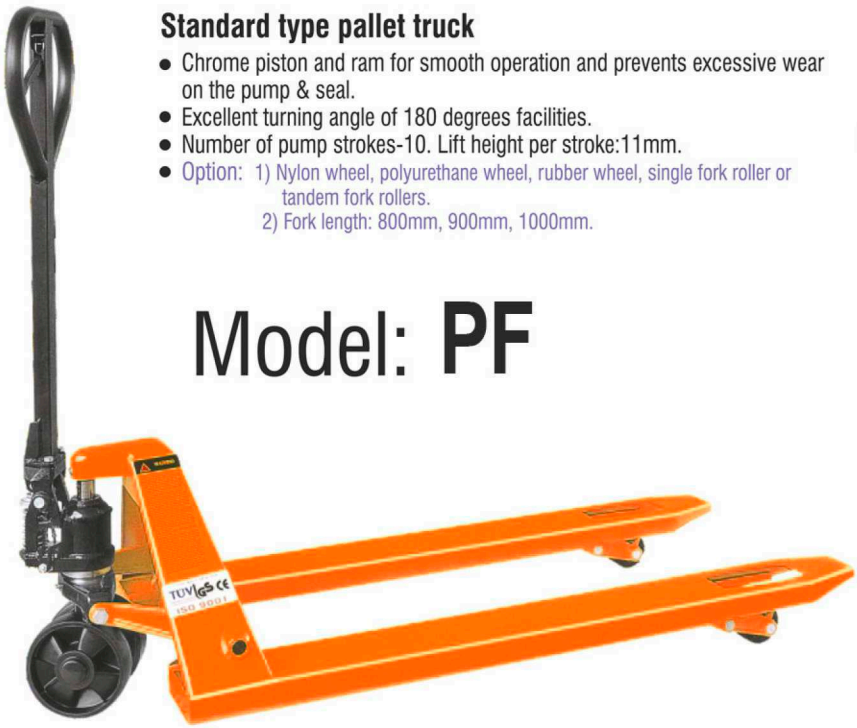

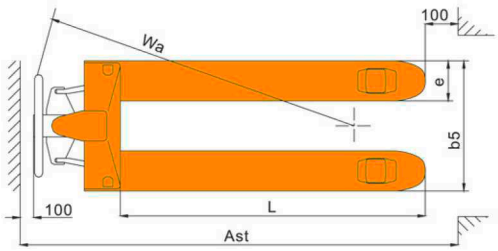

(mm)

SHIGEMITSU
マティアリアル ハンドリング イクィプメンツ

Model: **PKN**

1KG=2.205LB 1INCH=25.40MM

Model		PKN	
Capacity	Q(kg)	2500	2500
Lowered fork height	h_{13}(mm)	85	75
Steering wheel	mm	ϕ200	ϕ180
Fork wheel single	mm	ϕ83x81	ϕ74x93
Fork wheel tandem	mm	ϕ83x60	ϕ74x70
Max. lift height	h_3(mm)	195	185
Total height	h_{14}(mm)	1160.5	1160.5
Overall length	l_1(mm)	1545/1615	1545/1615
Fork length	l (mm)	1150/1220	1150/1220
Width overall forks	b_5(mm)	520/550/685	520/550/685
Thickness	s(mm)	53	45
Ground clearance, centre of wheelbase	m_2(mm)	32	30
Aisle width for pallets 1000x1200 crossways	A_{st}(mm)	1745/1815	1745/1815
Aisle width for pallets 800x1200 lengthways	A_{st}(mm)	1795/1815	1795/1815
Turning radius	W_a(mm)	1280/1350	1280/1350
Service weight	kg	75-102	75-102

Conform to EN ISO3691-5:2014
Based on Directive 2006/42/EC

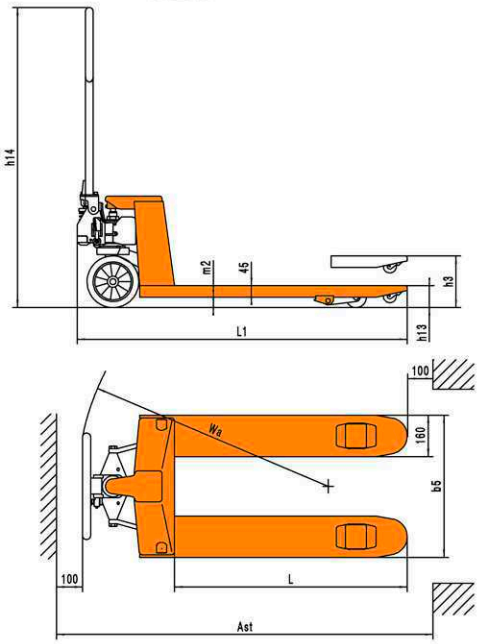

Standard type pallet truck

- Most compact and popular design of pump unit.
- Standard versions for finished using a tough epoxy based coating which is resistant to chips and normal corrosion.
- Heavy duty forks for greatest strength, durability and super strong frame.
- 3 position control lever Lifting-Neutral-Lowering hydraulic encased in protective steel housing.
- Excellent turning angle of 200 degree facilities.
- Option: 1) Nylon wheel, polyurethane wheel, rubber wheel, single fork roller or tandem fork rollers.
  2) Fork length: 800mm, 900mm, 1000mm, 1100mm.
  3) PK chassis.

Model: PKV 5000KG

1KG=2.205LB 1INCH=25.40MM

Model		PKV	
Capacity	Q(kg)	5000	5000
Lowered fork height	h_{13}(mm)	88	78
Steering wheel	mm	ϕ200	ϕ180
Fork wheel single	mm	~	~
Fork wheel tandem	mm	ϕ85x80	ϕ75x80
Max. lift height	h_3(mm)	205	195
Total height	h_{14}(mm)	1253	1243
Overall length	l_1(mm)	1544/1614	1544/1614
Fork length	l (mm)	1150/1220	1150/1220
Width overall forks	b_5(mm)	550/685	550/685
Ground clearance, centre of wheelbase	m_2(mm)	28	18
Aisle width for pallets 1000x1200 crossways	A_{st}(mm)	1744/1814	1744/1814
Aisle width for pallets 800x1200 lengthways	A_{st}(mm)	1794/1814	1794/1814
Turning radius	W_a(mm)	1300/1370	1300/1370
Service weight	kg	103-110	103-110

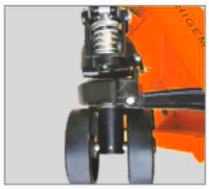

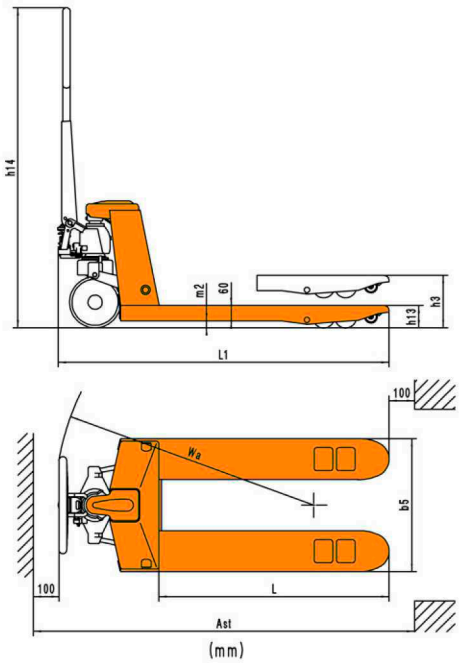

Heavy duty type pallet truck

- High reliability and long service life of 5 years.
- Double lifting speed when loads under 600kg, which turns back to regular speed when above it.
- Impact free lifting ensures safety of cargo loading.
- The lifting system is equipped with overloading protection valve to ensure the safe operation.
- The utilized structural design guarantees the convenience of assembling and disassembling.
- Light-weight fork frame, made from high rigidity steel plate.
- Compact appearance, complete rocker arm, ensure the whole truck evenly pressed.
- There is a finger hole in the connection of handle and pump, easy to assemble.

High Lift Truck

SHIGEMITSU
マティアリアル ハンドリング イクィプメンツ

Model: PKH

Conforms to EN 1757-4:2004
Based on Directive 2006/42/EC

- Ideal design with numerous possibilities makes this unit very suitable as pallet truck/scissor lift table.
- Telescopic jack composes of 3 piston rods creating light pumping force giving great rigidity.
- Support legs come into operation automatically.
- It prevents the unit from moving when the forks are raised to keep the safety of the operator.
- Truck automatically slows the descending speed when heavy goods loaded to prevent cargo damage.
- 210 degree turning radius.
- 2 lateral stabilizers when raised ensure good stability.

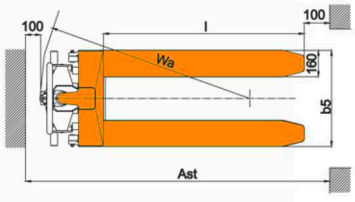

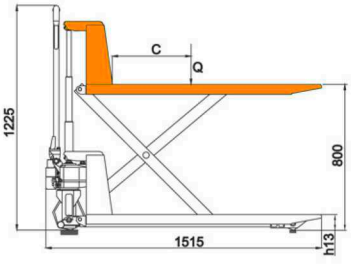

1KG=2.205LB 1INCH=25.40MM

Model		PKH	PKH7
Capacity	Q(kg)	1000	1000
Lowered fork height	h_{13}(mm)	85	85
Steering wheel	mm	Φ180X50	Φ180X50
Fork wheel	mm	Φ74X50	Φ74X50
Fork length	l (mm)	1150	1220
Width overall forks	b_5(mm)	520/550/685	550/685
Aisle width for pallets 1000x1200 crossways	A_{st}(mm)	1715	1985
Aisle width for pallets 800x1200 lengthways	A_{st}(mm)	1765	1985
Turning radius	W_a(mm)	1360	1670
Service weight	kg	108-112	112

Model: PKH7

- Improved safety: Automatic activation of self adjusting stabilizers when lifting loads higher than 400 mm for maximum stability .
- Great stability: Extra long front legs increase the stability when handling unevenly loaded pallets.
- Quick-lift operation: Quick-lift function doubles the lifting speed when lifting loads less than 250kg.

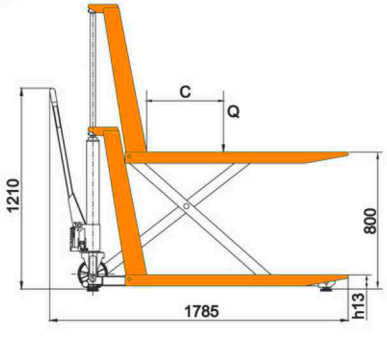

Manual Stacker

SHIGEMITSU
マティアリアル ハンドリング イクィプメンツ

Conforms to EN ISO3691-5:2009
Based on Directive 2006/42/EC

Model:
STM500
STM1000
STM1500

Model:
STMA-I
(1000~1500kg)

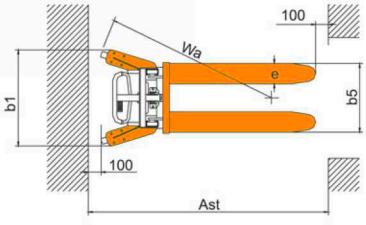

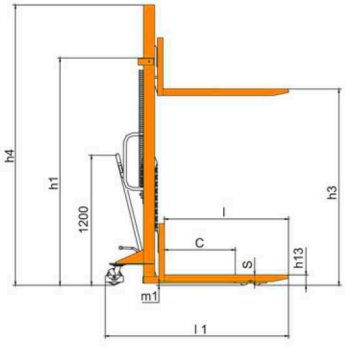

STM series with fixed forks

1KG=2.205LB 1INCH=25.40MM

Model		STM500	STM1000	STM1500	SMMA20E-I	STMA1000-I	STMA1500-I	SMMA20E-III
Load capacity/rated load	**Q(kg)**	**500**	**1000**	**1500**	**2000**	**1000**	**1500**	**2000**
Load centre distance	c(mm)	600	600	400	400	500	500	400
Fork height, lowered	h_{13}(mm)	90	90	90	93	90	90	90
Height, mast lowered	h_1(mm)	1490/2080	1490/1720/2080/1838/2080	2080	2085	2090/1840	2090	2085
Max. lift height	**h_3(mm)**	**1000/1600**	**1000/1200/1600/2500/3000**	**1600**	**1500**	**1600/2500**	**1600**	**1500**
Height, mast extended	h_4(mm)	1490/2080	1490/1720/2080/2925/3420	2080	2085	2090/2925	2090	2085
Overall length	l_1(mm)	1655/1705	1655/1705	1655/1705	1425	1680	1680	1482
Overall width	b_1(mm)	755	755/755/755/860/860	755	830	955	955	830
Fork dimensions	s/e/l(mm)	61/170/1100(1150)	61/170/1100(1150)	61/170/1100(1150)	60/170/900	60/142/1070	60/154/1070	60/166/900
Width overall forks	b_5(mm)	550	550/550/550/580/580	550	580	295~930	310~930	350-710
Ground clearance, laden, below mast	m_1(mm)	25	25	25	20	25	25	20
Aisle width for pallets 1000x1200 crossways	A_{st}(mm)	2112	2112	2112	2131	2146	2146	2166
Aisle width for pallets 800x1200 lengthways	A_{st}(mm)	1945	1945	1945	2108	2141	2141	2163
Turning radius	W_a(mm)	1380	1380	1380	1250	1235	1235	1250
Lift speed,laden/unladen	mm/time	25	25	21	18/20	25	21	18/20
Lowering speed,laden/unladen	mm/s		Manual control				Manual control	
Service weight	kg	185 / 205	183/191/210/286/307	245	260	240/306	280	260

Model:
STMA500
STMA1000
STMA1500
Forged Forks

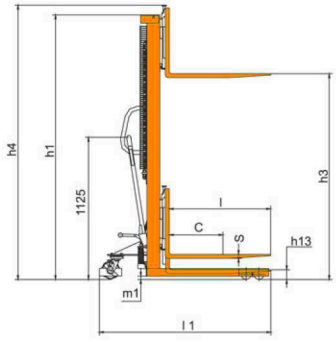

Model:
SMMA1500

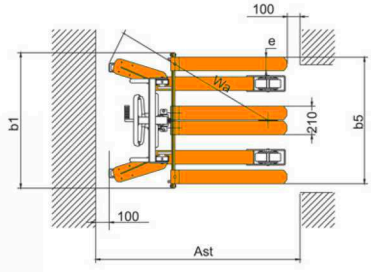

Model:
STMAS500
STMAS1000

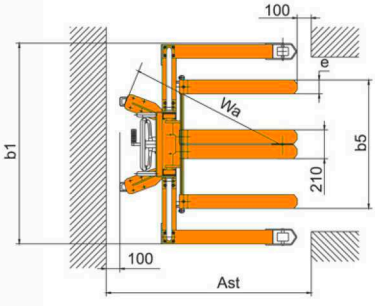

Model:
SMMA20E

Folded Foot Pedal

STMA series with adjustable forks
STMAS series with straddle legs

1KG=2.205LB 1INCH=25.40MM

Model		STMA500	STMA1000	STMA1500	STMAS500	STMAS1000	SMMA1500	SMMA20E
Load capacity/rated load	**Q(kg)**	**500**	**1000**	**1500**	**500**	**1000**	**1500**	**2000**
Load centre distance	c(mm)	500	500	500	500	500	400	400
Fork height, lowered	h_{12}(mm)	90	90	90	70	70	97	90
Height, mast lowered	h_1(mm)	2000	2085/1840	2090	2000	2050	1940	2085
Max. lift height	**h_3(mm)**	**1600**	**1600/2500**	**1600**	**1600**	**1600**	**1500**	**1500**
Height, mast extended	h_4(mm)	2010	2165/2925	2150	2100	2155	2000	2085
Overall length	l_1(mm)	1380/1640	1380/1640	1380/1640	1340/1600	1300/1560	1350	1386
Overall width	b_1(mm)	805	1000/750	1000	1500	1450	1050	1000
Fork dimensions	s/e/l(mm)	48/100/800(1060)	30/100/800(1060)	30/100/800(1060)	48/100/800(1060)	30/100/800(1060)	48/100/850	32/120/900
Width overall forks	b_5(mm)	200~745	200~950/700	200~950	745	950	980	250~950
Round clearance, laden,below mast	m_1(mm)	20	25	25	25	25	25	25
Aisle width for pallets 1000x1200 crossways	A_{st}(mm)	1915	1915	1915	1975	1975	2050	2050
Aisle width for pallets 800x1200 lengthways	A_{st}(mm)	1910	1910	1910	1915	1915	2040	2040
Turning radius	W_a(mm)	1235	1235	1235	1200	1200	1245	1250
Lift speed,laden/unladen	mm/time	25	25	21	25	25	20	18/20
Lowering speed,laden/unladen	mm/s	Manual control						
Service weight	kg	161	250/316	280	217	336	283	265

Conforms to EN ISO3691-5:2014
Based on Directive 2006/42/EC

Model: PKM

MINI Pallet Truck

Only 35kg!

1KG=2.205LB 1INCH=25.40MM

Model		PKM
Capacity	Q(kg)	500
Lowered fork height	h_{13}(mm)	60
Steering wheel	mm	ϕ127
Fork wheel	mm	ϕ58
Max. lift height	h_3(mm)	150
Total height	h_{14}(mm)	1127
Overall length	l_1(mm)	1126
Fork dimensions	s/e/l	40/100/800
Width overall forks	b_5(mm)	380
Service weight	kg	35

Model: PKJ

Reel Carrier Truck

1KG=2.205LB 1INCH=25.40MM

Model		PKJ
Capacity	(kg)	1000
Diameter of bale	(mm)	ϕ700～ϕ1200
Height of handleless	(mm)	431.5
Fork length	(mm)	1150
Max width overall forks	(mm)	965
Steering wheel	(mm)	ϕ200
Fork wheel	(mm)	ϕ80
Weight	(kg)	135

Model: PKW

Rough Terrain Truck

- Special for building site

1KG=2.205LB 1INCH=25.40MM

Model		PKW
Capacity	(kg)	1500
Lowered fork height	(mm)	70
Total lift height	(mm)	240
Height of handleless	(mm)	734
Total height	(mm)	1298
Total width	(mm)	1605
Fork length	(mm)	800
Max width overall forks	(mm)	740
Least width overall forks	(mm)	226
Steering wheel	(mm)	ϕ250x60
Fork wheel	(mm)	ϕ380x114
Weight	(kg)	192

- Different fork size can be made according to customers' requirement.

Pallet Truck Stop

Model: PS

- "Pallet Truck Stop" is designed to eliminate damage due to runaway pallet Jacks, which can be easily picked up and placed in convenient spots.
- Drivers will never again have to tie down a pallet jack, use a load bar to hold it or flip it on its side. Just pull the jack into the pallet truck stop and it's parked in less than two seconds fully secured.
- It is the best device designed to hold any pallet Jacks in a moving car or trailer.

Multi-function Hand Pallet Truck

SHIGEMITSU
マティアリアル ハンドリング イクィプメンツ

Model: **PKQ**

Quick Lift Model

- The quick lift pallet truck is an ideal truck for light load handling.
- Whenever lifting loads under 300kg, it takes just 5 strokes reached max. height.
- For loads above 300 kg, the quick lift hydraulic system automatically switches to normal operation.

Option: Foot brake

Model: **PKB**

Pallet Truck With Brake System

- Pallet truck with brake system can conveniently cease the truck and navigate ramps.

Patent No. of China:00216593.7

Model: **PKT**

Traverse Pallet Truck

- Designed for moving long loads down narrow aisles.
- Traverse movement effects when the fork height up to 180mm, and turn the handle by an angle of 90 degrees.
- Traverse movement provides more flexibility and convenience of applications as condition changes.
- Load capacity: 2500kg (1500kg traverse traveling).

1KG=2.205LB 1INCH=25.40MM

Model		PKQ	PKB	PKT
Capacity	Q(kg)	2500	2500	2500 (1500 traverse)
Lowered fork height	h_{13}(mm)	85/75	85/75	85/75
Steering wheel	mm	ϕ200/ϕ180	ϕ200/ϕ180	ϕ200/ϕ180
Fork wheel single	mm	ϕ80x93/ϕ74x93	ϕ80x93/ϕ74x93	ϕ80x70/ϕ74x70 (fork wheel)
Fork wheel tandem	mm	ϕ80x70/ϕ74x70	ϕ80x70/ϕ74x70	ϕ65x60 (traverse wheel)
Max. lift height	h_3(mm)	200/190	200/190	200/190
Total height	h_{14}(mm)	1224/1214	1224/1214	1224/1214
Overall length	l_1(mm)	1533/1603	1533/1603	1533/1603
Fork length	l (mm)	1150/1220	1150/1220	1150/1220
Width overall forks	b_5(mm)	520/550/685	520/550/685	520/550/685
Ground clearance, centre of wheelbase	m_2(mm)	40/30	40/30	40/30
Aisle width for pallets 1000x1200 crossways	A_{st}(mm)	1733/1803	1733/1803	1733/1803
Aisle width for pallets 800x1200 lengthways	A_{st}(mm)	1783/1803	1783/1803	1783/1803
Turning radius	W_a(mm)	1266/1336	1266/1336	1266/1336
Service weight	kg	65-85	65-85	65-85

Model: PKL

Low-profile Pallet Truck

- 1.5T Cap. lowered fork height - 52mm.
- 1T Cap. lowered fork height - 35mm.
- Steel fork rollers.

Model: PKE

High-profile Pallet Truck

Model: PKS

Stainless Steel Pallet Truck

- Widely used in carrying meat, marine products, wines, beverage,chemicals, etc. and can work in very low temperature conditions,e.g.to deliver goods into and out of freezers/coolers.

Model: PKG

Galvanized Pallet Truck

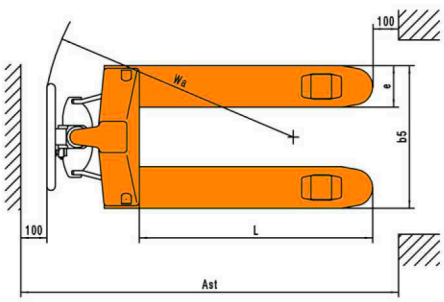

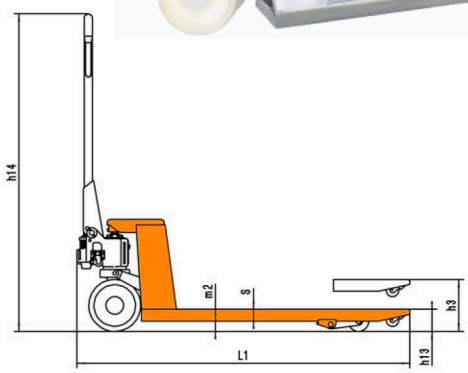

(mm)

1KG=2.205LB 1INCH=25.40MM

Model		PKL10	PKL15	PKE	PKS	PKG
Capacity	Q(kg)	1000	1500	2000	2500	2500
Lowered fork height	h_{13}(mm)	35	52	140	85/75	85/75
Steering wheel	mm	ϕ150	ϕ150	ϕ180	ϕ200/ϕ180	ϕ200/ϕ180
Fork wheel single	mm	~	ϕ50x93	ϕ126x68	ϕ80x93/ϕ74x93	ϕ80x93/ϕ74x93
Fork wheel tandem	mm	ϕ35x60	ϕ50x70	~	ϕ80x70/ϕ74x70	ϕ80x70/ϕ74x70
Max. lift height	h_3(mm)	105	140	255	200/190	200/190
Total height	h_{14}(mm)	1174	1189	1279	1224/1214	1224/1214
Overall length	l_1(mm)	1533/1603	1547/1617	1533/1603	1533/1603	1533/1603
Fork dimensions	s/e/l	28/150/1150(1220)	38/150/1150(1220)	45/160/1150(1220)	45/160/1150(1220)	45/160/1150(1220)
Width overall forks	b_5(mm)	520/550/685	520/550/685	520/550/685	520/550/685	520/550/685
Ground clearance, centre of wheelbase	m_2(mm)	7	14	95	40/30	40/30
Aisle width for pallets 1000x1200 crossways	A_{st}(mm)	1733/1803	1747/1817	1733/1803	1733/1803	1733/1803
Aisle width for pallets 800x1200 lengthways	A_{st}(mm)	1783/1803	1797/1817	1783/1803	1783/1803	1783/1803
Turning radius	W_a(mm)	1266/1336	1286/1356	1266/1336	1266/1336	1266/1336
Service weight	kg	65-80	65-80	70-80	65-80	65-80

Multi-function Hand Pallet Truck

SHIGEMITSU
マティアリアル ハンドリング イクィプメンツ

Model: PK3500

Heavy Duty Truck

1KG=2.205LB 1INCH=25.40MM

Model		PK3500
Capacity	(kg)	3500
Lowered fork height	(mm)	85/75
Total lift height	(mm)	200/190
H. of handleless	(mm)	443/433
Fork length	(mm)	1150/1220
Width overall forks	(mm)	550/685
Steering wheel	(mm)	ϕ200/ϕ180
Fork wheel	(mm)	ϕ80/ϕ74
Truck weight	(kg)	100

Model: PKR

Pallet Truck With Backrest

1KG=2.205LB 1INCH=25.40MM

Model		PKR
Capacity	(kg)	2500
Lowered fork height	(mm)	85/75
Total lift height	(mm)	200/190
H. of handleless	(mm)	431.5/421.5
Fork length	(mm)	1150/1220
Width overall forks	(mm)	520/550/685
Steering wheel	(mm)	ϕ200/ϕ180
Fork wheel	(mm)	ϕ80/ϕ74
Truck weight	(kg)	95/105

Model: PKW PKWL

Super Wide Truck

1KG=2.205LB 1INCH=25.40MM

Model		PKW	PKWL
Capacity	(kg)	1500	1500
Lowered fork height	(mm)	85/75	52
Total lift height	(mm)	200/190	140
H. of handleless	(mm)	431.5/421.5	396
Fork length	(mm)	1150/1220	1150/1220
Width overall forks	(mm)	740/830/965/1000/1200/1400	
Steering wheel	(mm)	ϕ200/ϕ180	ϕ150
Fork wheel	(mm)	ϕ80/ϕ74	ϕ50
Truck weight	(kg)	100	100

Model: PKZ

Super Narrow Truck

1KG=2.205LB 1INCH=25.40MM

Model		PKZ
Capacity	(kg)	2000
Lowered fork height	(mm)	75
Total lift height	(mm)	190
H. of handleless	(mm)	401.5
Fork length	(mm)	800
Width overall forks	(mm)	320/390/406
Steering wheel	(mm)	ϕ160
Fork wheel	(mm)	ϕ70
Truck weight	(kg)	65

Narrow Aisle Forklift Truck

SHIGEMITSU
マティアリアル ハンドリング イクィプメンツ

Model:
ND10A
ND10B

Advantages:

- Advanced AC control system with MOSFET delivers smooth driving speed control for precise.
- Small turning radius, easy and smart to operate.
- Lean-on compartment reducing operator's fatigue.
- With regenerative braking system for driving and electronic braking system for parking.
- Low Battery Protection setting prolongs service life.
- With deadman switch on floor to cut off the power when operator leave the foot from cab.
- Lifting cylinders on the both of mast provides best visibility.
- The optional of Full Hydraulic Steering System and **EPS offers follow advantages :**
  -Steering wheel automatic reset.
  -Traveling speed automatically slow down when steering.
  -Show the turning angles on the display.

AC EPS

Comfortable operation compartment with adjustable supporting plate

Multi function display

Conforms to EN 1726-1/A1:2003
Based on Directive 2006/42/EC

Model		ND10A	ND10AC	ND10B	ND10BC	ND10BZ
Power		battery	battery	battery	battery	battery
Capacity/rated load	**Q(kg)**	**1000**	**1000**	**1000**	**1000**	**1000**
Load centre distance	c(mm)	600	600	500	500	500
Max. lift height	**h_3(mm)**	**3000**	**3000**	**5000**	**5000**	**5000**
Load distance, centre of drive axle to fork	x(mm)	140	205	180	210	186
Tyre size, front	mm	Φ250x80	Φ250x80	Φ250x80	Φ250x80	Φ250x80
Tyre size, rear	mm	Φ280x100	Φ280x100	Φ280x100	Φ280x100	Φ280x100
Variation of side shifter, left / right	mm	0	100/100	0	100/100	0
Height,mast lowered	h_1(mm)	2155	2155	2255	2250	2250
Free lift	h_2(mm)	1600	1600	~	~	1600
Height, mast extended	h_4(mm)	3565	3565	5600	5600	5600
Height of overhead guard(cabin)	h_6(mm)	2090	2090	2090	2090	2090
Height of tiller in drive position min./max.	h_{14}(mm)	1000	1000	1000	1000	1000
Overall length	l_1(mm)	2210	2270	2250	2290	2290
Overall width	b_1(mm)	850	850	850	850	850
Fork dimensions	s/e/l(mm)	35/100/950	35/100/950	35/100/950	35/100/950	35/100/950
Fork carriage DIN 15173, class/type A,B		II/A	II/A	II/A	II/A	II/A
Fork-carriage width	b_3(mm)	560	560	560	560	560
Ground clearance, centre of wheelbase	m_2(mm)	50	50	50	50	50
Aisle width for pallets 1000x1200 crossways	A_{st}(mm)	2700	2760	2750	2820	2800
Aisle width for pallets 800x1200 lengthways	A_{st}(mm)	2810	2870	2860	2930	2910
Turning radius	W_a(mm)	1200	1200	1250	1300	1300
Travel speed, laden/unladen	Km/h	5.8/6.0	5.8/6.0	5.8/6.0	5.8/6.0	5.8/6.0
Lifting speed, laden/unladen	m/s	0.11/0.15	0.11/0.15	0.15/0.25	0.15/0.25	0.15/0.25
Lowering speed, laden/unladen	m/s	0.15/0.11	0.15/0.11	0.08/0.10	0.08/0.10	0.08/0.10
Battery voltage, nominal capacity K5	V/Ah	24/360	24/360	24/360	24/360	24/360
Battery weight	Kg	355	355	355	355	355
Battery dimensions l/w/h	mm	610x278x690	610x278x690	610x278x690	610x278x690	610x278x690
Service weight (with battery)	kg	2120	2180	2230	2320	2350

Remark:

- ND10AC/ ND10BC with side shifter.
- ND10BZ with full free lift mast.

DIMENSIONS

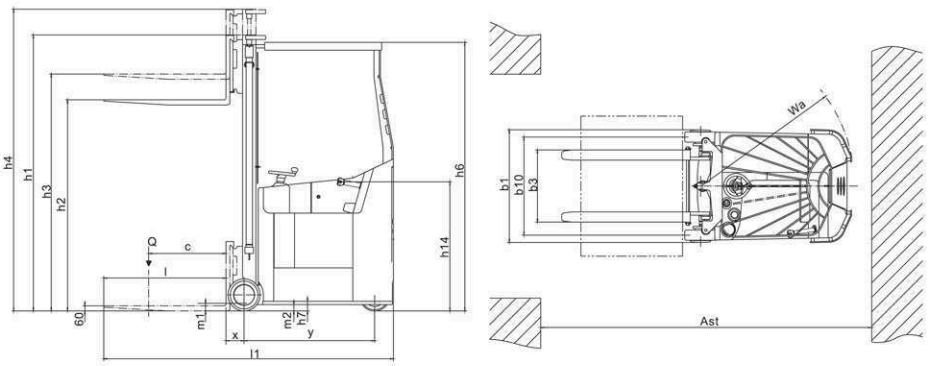

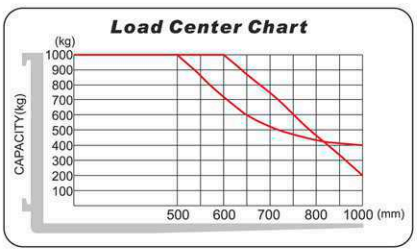

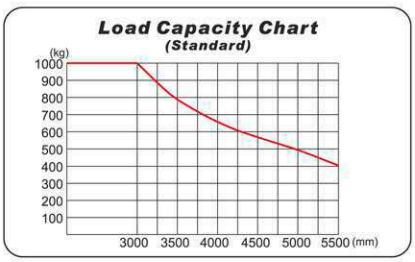

Narrow Aisle Lift Truck

SHIGEMITSU
マティアリアル ハンドリング イクィプメンツ

Model: NP15C

Advantages:

SAFETY AND PRODUCTIVITY:

- Brushless AC motor , intelligentize regenerative brake system.
- Adjustable driving speed. 4 levels, from 3km to 10km.
- Finger-tip control via joystick: driving speed (4 levels), lifting & lowering speed , opening/closing stabilizer.
- Manually or automatically ensure stability and safety.
- Applicable in double pallets function while forks are lifting up.
- Built-in pressure relief valve protects truck from overloading.
- Multi-function display: battery state, working hour meter, fault status, driving speed (4 levels), angel indicator of rear steering wheel, etc.
- Low placed battery offers lower center of gravity and better stability.
- Side battery with roll-out system is very convenient to replace batteries.
- Damping cushion for low-noise operation.
- Emergency power disconnect.

STRUCTURAL:

- Compact truck with "Heavy duty" constructed.
- Low center of gravity ensures stability.
- Wide view masts with clear visibility.
- Masts are detachable from truck frame and with good interchangeability.
- Low step and sensitive dead-man pedal offers comfortable operation.
- Narrower overhead guard towards front, to ensure less possibility to get "hooked" into something.
- Availability of 360 degree steering offers smallest turning radius 1800mm.
- Adjustable steering wheel and arm support give driver the most comfortable feeling.
- Drive wheel and balanced wheel are combined together to ensure stability.

SERVICE ABILITY:

- The low voltage protection system prolongs battery life.
- CANbus technology reduces wiring complexity and increases reliability and service friendly.
- Improved battery plug system makes battery to be connected/disconnected for charging more easily.

AC

EPS

Multi-function display

Finger-tip joystick and adjustable arm support

Manual or automatic stabilizers switch

Stabilizers
Side-way Battery

Model		NP15C
Load capacity/rated load	**Q(kg)**	**1500**
Load centre distance	c(mm)	600
Load distance, centre of drive axle to fork	x(mm)	745
Tyre size, front	mm	ϕ250x100
Tyre size rear	mm	ϕ80x70
Additional wheels(dimensions)	mm	ϕ150x47
Wheels, number front rear(x=driven wheels)		1x+2/4
Height, mast lowered	h_1(mm)	2022/2182/2382
Free lift	h_2(mm)	1570/1740/1940
Max. lift height	**h_3(mm)**	**4500/5000/5600**
Height, mast extended	h_4(mm)	5020/5520/6120
Initial lift	h_5(mm)	120
Height, lowered	l_{13}(mm)	90
Overall length	l_1(mm)	2090
Length to face of forks	l_2(mm)	1020
Overall width	b_1/b_2(mm)	970
Fork dimensions	s/e/l(mm)	60/180/1070(150)
Distance between fork-arms	b_5(mm)	570
Height of overhead guard(cabin)	h_6(mm)	2255
Aisle width for pallets 1000x1200 crossways	A_{st}(mm)	2650
Aisle width for pallets 800x1200 lengthways	A_{st}(mm)	2610
Turning radius	W_a(mm)	1800
Travel speed, laden/unladen	Km/h	8.5/10
Lift speed, laden/unladen	m/s	0-0.11/0-0.16
Lowering speed, laden/unladen	m/s	0-0.30/0-0.14
Battery voltage,nominal capacity K_5	V/Ah	24/400
Battery weight	kg	330
Battery dimensions l/w/h	mm	675x254x760
Service weight (with battery)	kg	1960

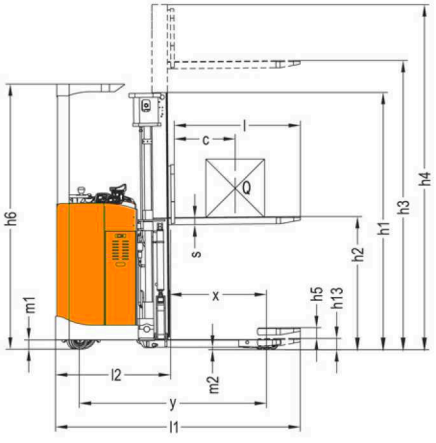

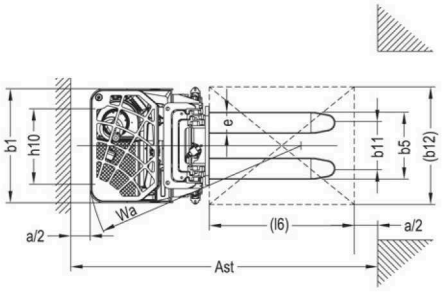

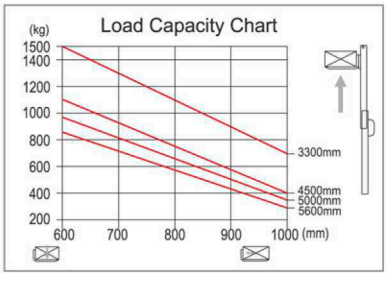

Scale Pallet Truck

SHIGEMITSU
マティアリアル ハンドリング イクィプメンツ

Model: PKC6 PKC6-II

(Scale pallet truck with printer)

Model: PKC6-7 PKC6-8

(Scale pallet truck with printer)

- Mobile pallet truck with scale combined two major functions for pallet truck/scale, allows you to weigh cargo whatever, wherever, whenever you want.
- Power supply with rechargeable battery or with 86~264V AC input .
- Keypad and automatic tare functions.
- 1.2inches, super-large and bright LED display in solid state to be strike-free.
- Available in pounds or kilograms.
- A/D velocity: 27/s, a faster speed of weighing, more correct.
- Various functions: with extended functions as weight-checking ,counting, etc., to satisfy different needs of customers.
- Conforms to EU's ROHS standard.

Conforms to EN ISO3691-5:2014
Based on Directive 2006/42/EC

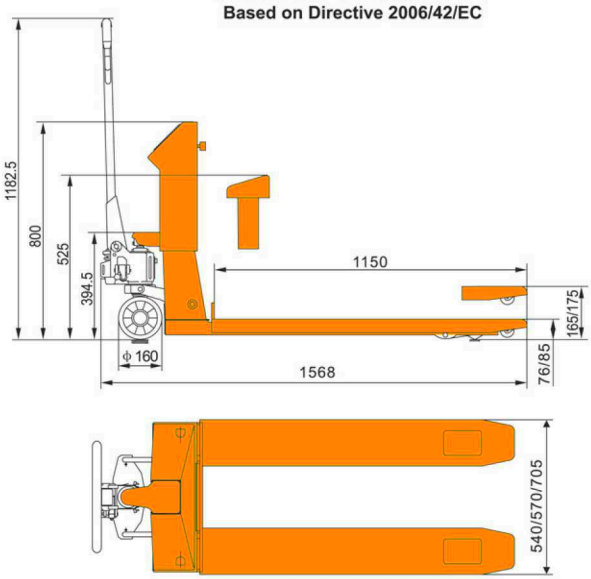

1KG=2.205LB 1INCH=25.40MM

Model		PKC6/PKC6-II	PKC6-7/PKC6-8
Capacity	(kg)	2000	2000
Lowered fork height	(mm)	76/85	76/85
Total lift height	(mm)	165/175	165/175
Fork length	(mm)	1150	1150
Width overall forks	(mm)	540/570/705	540/570/705
Steering wheel	(mm)	ϕ160	ϕ160
Fork wheel	(mm)	ϕ70	ϕ70
Power		Dry cell / Ni MH rechargeable battery	Lead-acid battery
Measuring interval		0.5	0.5
Max. deviation	(kg)	±1‰	±1‰
Service weight	(kg)	135	130

Conforms to EN ISO3691-5:2012
Based on Directive 2006/42/EC

Model: **PKC6-V**

(Lifting truck with electronic scale)

- Display with dry batteries, no power supply, it is environmental.
- Applicable for weighing in lifting.
- With bush on key parts, reliable quality.

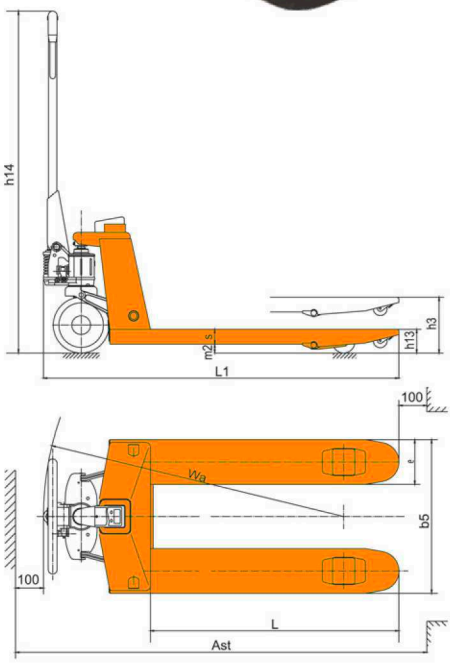

1KG=2.205LB 1INCH=25.40MM

Model		PKC6-V	
Capacity	kg	2500	2500
Lowest fork height	mm	85	75
Steering wheel	mm	ϕ200	ϕ180
Fork wheel single	mm	ϕ80	ϕ74
Max lifting height	h_3(mm)	200	190
Total height	h_{14}(mm)	1224	1214
Height without handle	mm	486	476
Fork length	l(mm)	1000/1100/1150/1220	
Width overall forks	b5(mm)	520/550/685	520/550/685
Ground clearance, center of wheelbase	m_2(mm)	32	22
Aisle width for pallets 1000x1200 crossways	A_{st}(mm)	1683/1733/1803	1683/1733/1803
Aisle width for pallets 800x1200 lengthways	A_{st}(mm)	1783/1783/1803	1783/1783/1803
Turning radius	W_a(mm)	1216/1266/1336	1216/1266/1336
Service Weight	kg	60-80	60-80

Scale Pallet Truck

SHIGEMITSU
マティアリアル ハンドリング イクィプメンツ

Model:
PKC6-7(S)

Stainless Steel Scale Truck

1KG=2.205LB 1INCH=25.40MM

Model		PKC6-7(S)
Capacity	(kg)	2000
Lowered fork height	(mm)	76/85
Total lift height	(mm)	165/175
Fork length	(mm)	1150
Width overall forks	(mm)	540/570/705
Steering wheel	(mm)	ϕ160
Fork wheel	(mm)	ϕ70
Power		Lead-acid battery
Measuring interval		0.5
Max. deviation	(kg)	±1‰
Service weight	(kg)	130

Model: MP20K(C)

Electric Pallet Truck with Scale

TOLEDO meter
Weighing accuracy ±2‰

1KG=2.205LB 1INCH=25.40MM

Model		MP20K(C)
Drive		electric
Load capacity/rated load	Q(kg)	2000
Load centre distance	c(mm)	600
Fork Height, lowered	h_{13}(mm)	82
Tyres		polyurethane
Tyre size,front		Φ250x70
Tyre size rear		Φ82x126
Additional wheels(dimensions)		Φ127x57
Max. lift height	h_3(mm)	120
Height of tiller in drive position min./max.	h_{14}(mm)	780/1230
Overall length	l_1(mm)	1673/1723/1793
Length to face of forks	l_2(mm)	573
Overall width	b_1(mm)	775
Fork dimensions	s/e/l(mm)	54x186x1100(1150/1220)
Width overall forks	b_5(mm)	556/656/691
Travel speed,laden/unladen	Km/h	5.5/5.6
Gradeability,laden/unladen	%	6/12
Max.gradeability,laden/unladen	%	8/20
Service brake		Electro magnetic
Battery voltage,nominal capacity K5	V/Ah	24/165(210)
Battery weight	Kg	170
Battery box dimensions	mm	750x170x474(534)
Service weight(without battery)	kg	690

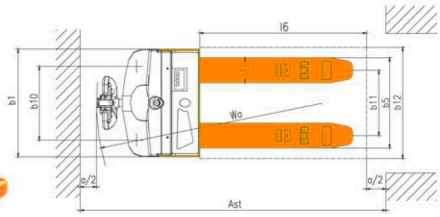

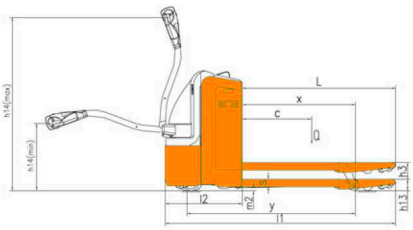

Conforms to EN 1175-1:1998
EN ISO3691-1:2008
Based on Directive 2006/42/EC

Scissor Lift Table

SHIGEMITSU
マティアリアル ハンドリング イクィプメンツ

EU Type

Model: **TR150**

- Valuable material handling equipment for use as a feeding table on assembly line.
- Structural heavy duty steel construction.
- Easy action foot operated hydraulic lift for raising table top to desired level.
- Hand operated table descent control.
- Over load by-pass valve protects operator and pump.

Conforms to EN 1570:2011
Based on Directive 2006/42/EC

Model: **TR800**
TR1000
TR1500

Model: **TR300**
TR500

Specification for EU type

1KG=2.205LB 1INCH=25.40MM

MODEL		TR150	TR300/SP500	TR800	TR1000	TR1500
Capacity	kg	150	300/500	800	1000	1500
Max. lift height	h_{12} (mm)	740	900	1000	1000	1000
Min. height of table	h_{13} (mm)	225	340	420	380	420
Lifting height	h_9 (mm)	515	560	580	620	580
Table size	lxb5xs (mm)	740x450x35	855x500x50	1000x510x55	1016x515x60	1220x610x60
Total height	h_{14}(mm)	935	970	996	962	962
Overall length	l_1 (mm)	830	925	1150	1170	1379
Foot pedal cycles to max height		≤25	≤32/≤45	≤70	≤55	≤70
Wheel diameter	d (mm)	100	127	150	150	150
Service weight	kg	44	82/87	115	115	135
Carton size	mm	880x480x265	950x530x390	1190x630x460	1190x630x430	1410x730x450

EU type TR150, TR300, TR500, TR800 instead of old model TRA150, TRA300, TRA500, TRA800

Scissor Lift Table

SHIGEMITSU
マティアリアル ハンドリング イクィプメンツ

U.S. Type

Model: **TR150**
TR300
TR500

Model: **TR200**

Model: **TR800**

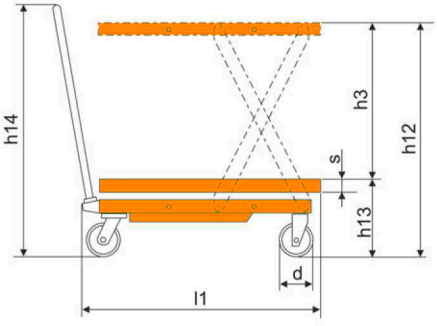

Specification for U.S. type

1KG=2.205LB 1INCH=25.40MM

Model		TR150	TR200	TR300/TR500	TR800	TR500A*	TR500B*	TR500C*
Capacity	kg	150	200	300/500	800	500	500	500
Max. lift height	h_{12} (mm)	740	1000	900	1000	900	1100	900
Min. height of table	h_{13} (mm)	225	330	280	420	305	310	305
Lifting height	h_3 (mm)	515	670	620	580	595	790	595
Table size	lxb5xs (mm)	700x450x35	1000x500x35	815x500x50	1000x510x55	1050x700x52	1200x800x52	1050x850x52
Total height	h_{14}(mm)	935	1056	996	996	970	970	970
Overall length	l_1 (mm)	770	1120	942	1150	1120	1270	1120
Foot pedal cycles to max height		≤25	≤25	≤32/≤45	≤70	≤55	≤55	≤55
Wheel diameter	d (mm)	100	200	127	150	127	127	127
Service weight	kg	42	71	77/85	103	108	120	108
Carton size	mm	820x480x265	1140x620x460	960x530x420	1190x630x460	1150x730x330	1300x830x340	1150x880x330

*Model TR500A, TR500B, TR500C are different on table size and lifting height.

Semi-electric Pallet Truck

SHIGEMITSU
マティアリアル ハンドリング イクィプメンツ

Conforms to EN ISO3691-1:2012
EN 16307-1:2013
Based on Directive 2006/42/EC

Model:
MP15A
MP20A

AC Function

Advantages:

- Permanent magnet brushless motor with high electric efficiency, maintenance free.
- Good gradient performance.
- With smallest turning radius.
- Full sealed battery free to maintain, big capacity 24v/65AH fit for high intensitive use.
- Constant traction spped for laden or unladen, improves productive efficiency.
- Horizontal drive wheel provides convenient replacement.
- Stepless speed control.
- Floating balance wheel supports automatic height-adjusting.
- Built-in charger.

Patent product

Model:
MP10A-II

Advantages:

- Two-speed driving system.
- Emergency brake switch.
- Manual lifting and motor driving.
- Brushless DC motor, with maintenance free, low noise.
- Sealed batteries free of maintenance, safe operation and enviromental.
- Built-in charger.

1KG=2.205LB 1INCH=25.40MM

Model		MP10A-II	MP15A	MP20A
Load capacity	**Q(kg)**	**1000**	**1500**	**2000**
Load centre distance	c(mm)	500	600	600
Fork height, lowered	h_{13}(mm)	85/75	85/75	87/77
Tyre size, front	mm	Φ185	Φ195	Φ195
Tyre size, rear	mm	Φ80/Φ74	Φ80/Φ74	Φ85/Φ75
Max. lift height	h_3(mm)	200/190	190/180	190/180
Height of tiller in drive position min./max.	h_{14}(mm)	670/1244	770/1254	770/1254
Overall length	l_1(mm)	1685/1755	1644/1714	1644/1714
Length to face of forks	l_2(mm)	535	490	490
Fork dimensions	s/e/l(mm)	45/160/1150(1220)	53/160/1150(1220)	60/160/1150(1220)
Width overall forks	b_5(mm)	520/550/680	520/550/685	520/550/680
Aisle width for pallets 1000x1200 crossways	A_{st}(mm)	1885/1955	1844/1914	1844/1914
Aisle width for pallets 800x1200 lengthways	A_{st}(mm)	1935/1955	1894/1914	1894/1914
Turning radius	W_a(mm)	1490/1560	1445/1515	1445/1515
Travel speed, laden/unladen	Km/h	2.6/3.8	5.3/5.8	5/5.5
Battery voltage, nominal capacity K5	V/Ah	24/38	24/65	24/80
Battery weight	Kg	28.5	48.8	49
Service weight(with battery)	Kg	150	200	240

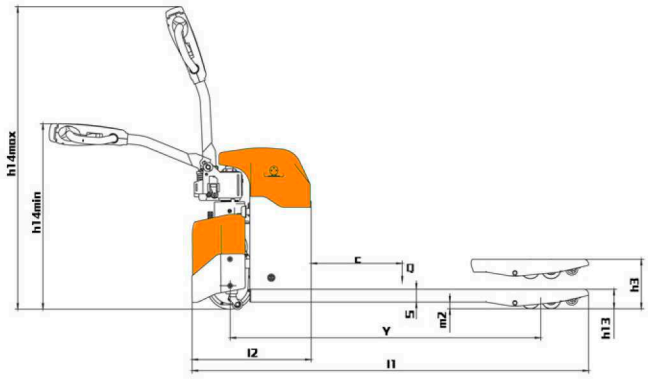

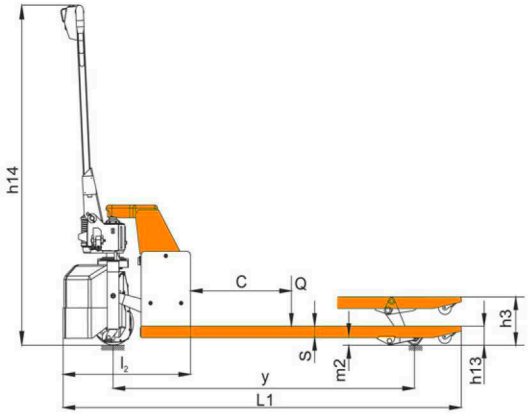

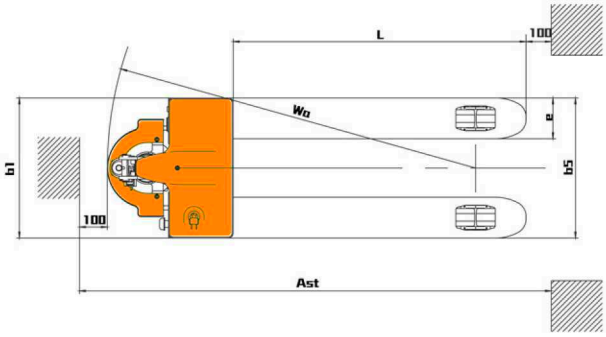

MP15A/20A

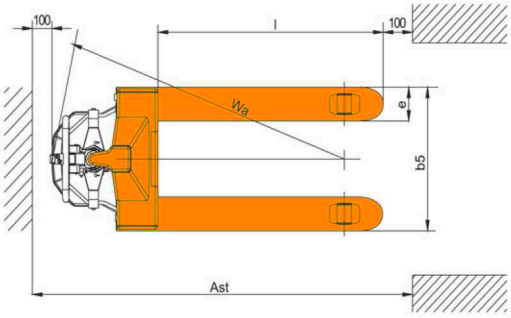

MP15A-II

Semi-electric Stacker

SHIGEMITSU
マティアリアル ハンドリング イクィプメンツ

Hot Sale

Super Light

Model:
KD10B-III
KD15B-III

Fix type forks

www.tuv.com TÜV ID:1000000000 GS geprüfte Sicherheit CE

Conforms to EN ISO3691-5:2009
1175-1:1998
Based on Directive 2006/42/EC

Model:
KD10B-III
KD15B-III

Straddle legs & Adjustable forks

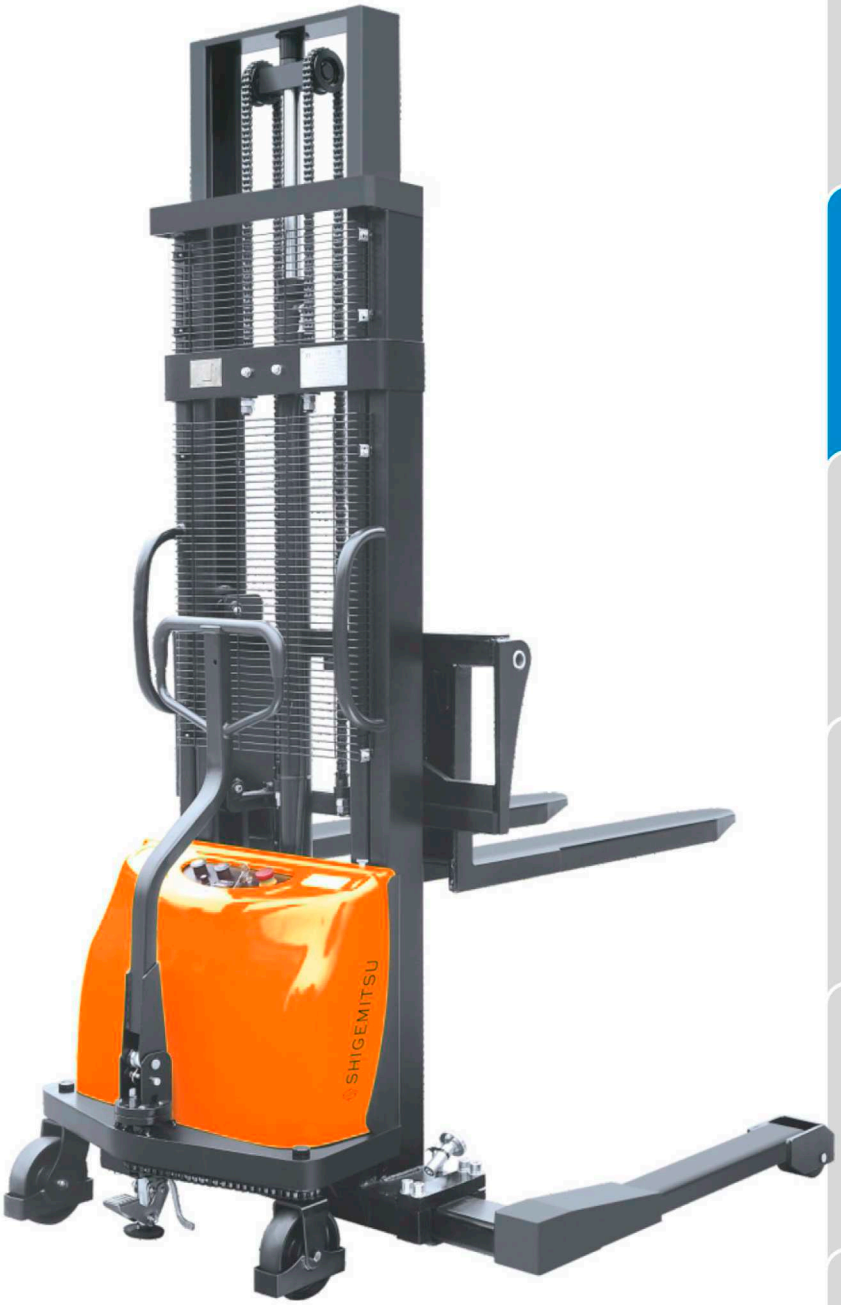

Advantages:

- Handle-castor chain assist steering system greatly reduces the labor intensity.
- Equipped with explosion-proof valve, against of sudden drop of forks and prevent operator from harm.
- Over-discharge protection device greatly prolongs the battery use time.
- Overall type adjustable forks, which can be lowered to the same level of the legs.
- Chain connect side wheel and handle , easy for steering .
- Easy operating foot brake.

Chain Assist Steering System

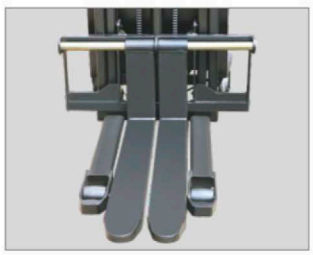

KDB-III
Adjustable Forks

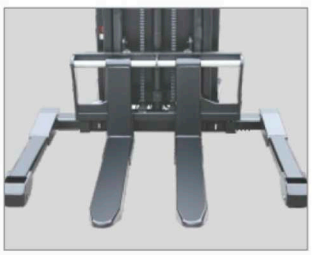

KTDB-III
Straddle legs & adjustable forks

Semi-electric Stacker

SHIGEMITSU
マティアリアル ハンドリング イクィプメンツ

1KG=2.205LB 1INCH=25.40MM

Model		Fix type forks		Adjustable forks			
		KD10B-III	KD15B-III	KD10B-III	KD15B-III	KTD10B-III	KTD15B-III
Load capacity	**Q(kg)**	**1000**	**1500**	**1000**	**1500**	**1000**	**1500**
Load centre distance	c(mm)	500	500	500	500	500	500
Load distance, centre of drive axle to fork	x(mm)	802	802	745	745	770	770
Tyre size, front	mm	ϕ180x50	ϕ180x50	ϕ180x50	ϕ180x50	ϕ180x50	ϕ180x50
Tyre size, rear	mm	ϕ80x70	ϕ80x70	ϕ80x70	ϕ80x70	ϕ98x82	ϕ98x82
Wheels, number front rear(x=driven wheels)		2/2	2/2	2/2	2/2	2/2	2/2
Height, mast lowered	h_1(mm)	2090/1840/2090		2090/1840/2090		2145/1895/2145	
Max. lift height	**h_3(mm)**	**1600/2500/3000**		**1600/2500/3000**		**1600/2500/3000**	
Height, mast extended	h_4(mm)	2090/3060/3560		2090/3060/3560		2145/3053/3552	
Overall length	l_1(mm)	1678	1740	1735	1835	1735	1835
Length to face of forks	l_2(mm)	608	670	665	765	665	765
Overall width	b_1(mm)	800	800	955	955	1132-1532	1132-1532
Fork dimensions	s/e/l(mm)	60/170/1070	60/170/1070	60/142/1070	60/142/1070	60/142/1070	60/142/1070
Width overall forks	b_5(mm)	580	695	295-930	295-930	295-930	295-930
Aisle width for pallets 800x1200 lengthways	A_{st}(mm)	2267	2347	2267	2347	2267	2347
Turning radius	W_a(mm)	1425	1505	1425	1505	1425	1505
Lift speed, laden/unladen	m/s	0.08/0.1	0.08/0.1	0.08/0.1	0.08/0.1	0.08/0.1	0.08/0.1
Lowering speed, laden/unladen	m/s	0.15/0.12	0.15/0.12	0.15/0.12	0.15/0.12	0.15/0.12	0.15/0.12
Service brake		mechanical	mechanical	mechanical	mechanical	mechanical	mechanical
Battery voltage, nominal capacity K_5	V/Ah	12/120	24/120	12/120	24/120	12/120	24/120
Battery weight	kg	45	90	45	90	45	90
Battery dimensions l/w/h	mm	360x170x250	360x170x250	360x170x250	360x170x250	360x170x250	360x170x250
Service weight (with battery)	kg	400/460/480	455/520/535	400/460/480	455/520/535	420/475/490	470/536/550

Option of battery for KD15B-III : 24V/120Ah

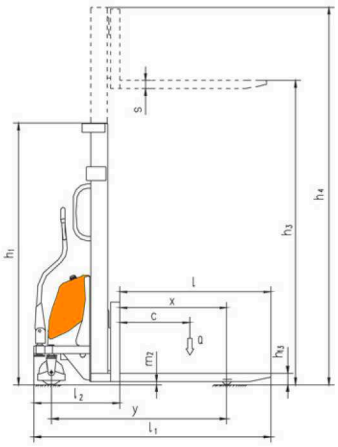

Fix type forks

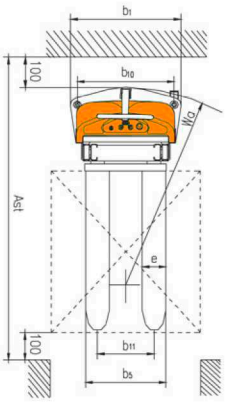

KD10B-III KD15B-III

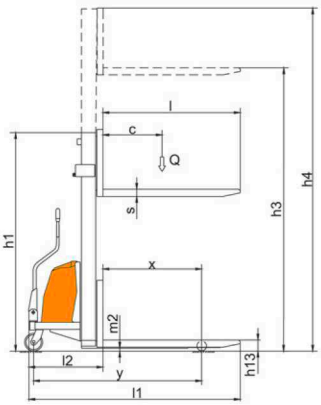

Adjustable forks

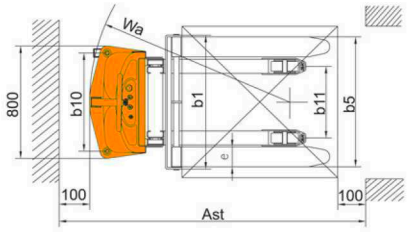

KD10B-III KD15B-III

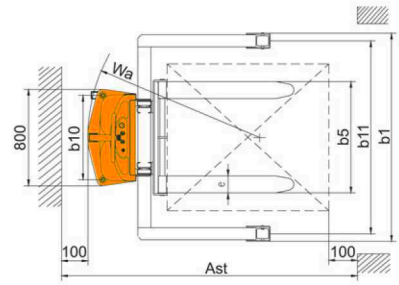

KTD10B-III KTD15B-III

1KG=2.205LB 1INCH=25.40MM

Model		KD1016BA	KD1025BA	KD1030BA
Capacity	**Q(kg)**	**1000**	**1000**	**1000**
Load centre distance	c(mm)	400	500	500
Fork height, lowered	h_{13}(mm)	90	90	90
Height, mast lowered	h_1(mm)	2088	1838	2088
Max. lift height	**h_3(mm)**	**1600**	**2500**	**3000**
Height, mast extended	h_4(mm)	2088	3088	3588
Overall length	l_1(mm)	1505	1728	1728
Fork dimensions	s/e/l(mm)	48/100/850	60/170/1100	60/170/1100
Width overall forks	b_5(mm)	200~980	550	550
Aisle width for pallets 800x1200 lengthways	A_{st}(mm)	2020	2140	2140
Turning radius	W_a(mm)	1210	1328	1328
Lift speed, laden/unladen	mm/s	80/100	80/100	80/100
Lowering speed, laden/unladen	mm/s		manual control	
Battery voltage, nominal capacity K_5	V/Ah	12/120	12/120	12/120
Service weight (with battery)	kg	300	370	382

Model:
KD1025BA
KD1030BA

Economy

Model:
KD1016BA

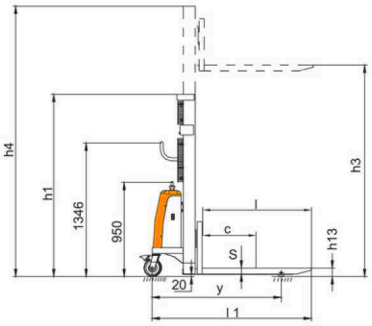

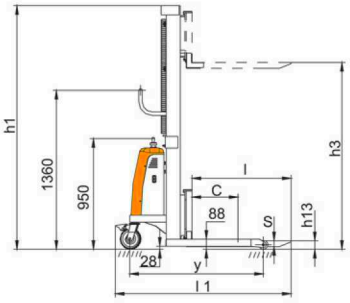

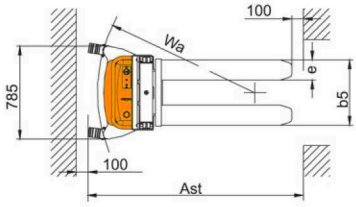

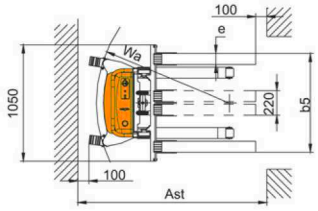

Semi-electric Stacker

SHIGEMITSU
マティアリアル ハンドリング イクィプメンツ

1KG=2.205LB 1INCH=25.40MM

Model		KD10B	KD15B	KTD10B	KTD15B
Capacity	**Q(kg)**	**1000**	**1500**	**1000**	**1500**
Load centre distance	c(mm)	500		600	
Load distance, centre of drive axle to fork	x(mm)	815		800	
Lowered fork height	h_{13}(mm)	90		70	
Max. lift height	**h_3(mm)**	**1600/2500/3000/3300**		**1600/2500/3000/3300/3500**	
Height, mast lowered	h_1(mm)	2090/1840/2090/2200		2145/1895/2145/2295/2395	
Height, mast extended	h_4(mm)	2090/2997/3497/3797		2145/3052/3552/3852/4052	
Fork dimensions	s/e/l(mm)	60/170/1070(1150)		35/100/1070(1150)	35/100/1070(1150)
Overall width	b_1(mm)	722		1132-1532	
Width overall forks	b_5(mm)	580/695		200-800	200-800
Aisle width for pallets 800x1200 lengthways	A_{st}(mm)	2188	2258	2142	2212
Turning radius	W_a(mm)	1340/1410		1340	1410
Lift speed,laden/unladen	m/s	0.08/0.1		0.08/0.1	
Lowering speed,laden/unladen	m/s	0.15/0.12		0.15/0.12	
Battery voltage,nominal capacity K5	V/Ah	12/200	24/200	12/200	24/200
Battery weight	kg	60	120	60	120
Battery dimensions l/w/h	mm	250x190x295		250x190x295	
Service weight (with battery)	kg	420/480/500/550	580/660/680/700	490/550/570/580/650	580/630/660/680/690

Standard Semi-electric Stacker

- Compact design with strong European steel construction.
- Simple and convenient lifting operating system.
- Light and easy manual steering system, equipped with a parking brake.
- Smooth control of precise lifting and lowering.
- Special design are available according to customers' requirements.

Remark:

KD series are with fixed legs & fixed forks.
KTD series are with straddle legs & adjustable forks.

Model:
KD10B/15B

Conforms to EN ISO3691-5:2009
EN 1175-1:1998
EN 1757-1:2001
Based on Directive 2006/42/EC

Model:
KTD10B/15B

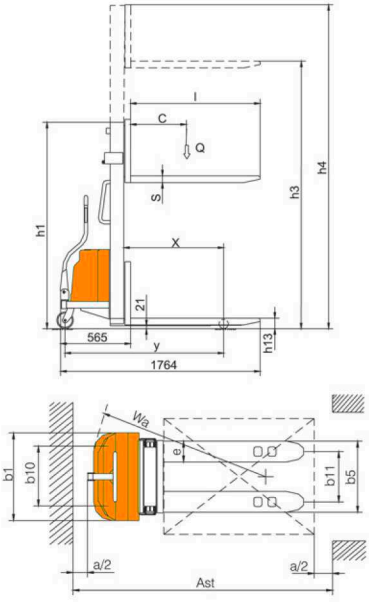

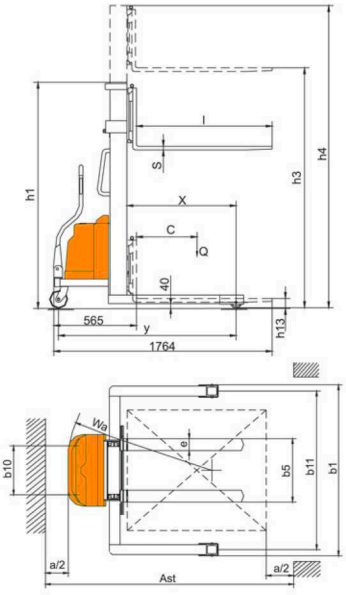

Stationary Lift Table

SHIGEMITSU
マティアリアル ハンドリング イクィプメンツ

Model: **TRT500**

Extra Large Plate

- Lower controlled by hand

Model: **TRTJ500**

Extra Large Plate

- Lower controlled by pedal

Electric Table Truck

Model: **TM30**
TM50

Model: **TMS35**

1KG=2.205LB 1INCH=25.40MM

Model		TM30	TM50	TMS35
Capacity	kg	300	500	350
Max. lift height	h_{12}(mm)	900	900	1320
Min. height of table	h_{13}(mm)	300	300	405
Lifting height	h_3(mm)	600	600	915
Table size	lxb5xs(mm)	815x500x50	815x500x50	910x500x56
Total height	h_{14}(mm)	1101	1101	1101
Wheel diameter	d	127	127	127
Moter power	kw	0.8	0.8	0.8
Lifting speed	S	≤10	≤10	≤15
Lowering speed	S	10	10	15
Battery voltage,nominal capacity K_5	V/Ah	24V/33Ah	24V/33Ah	24V/33Ah
Service weight	kg	111	114	150
Carton size	mm	1125x540x340	1125x540x340	1240x540x450

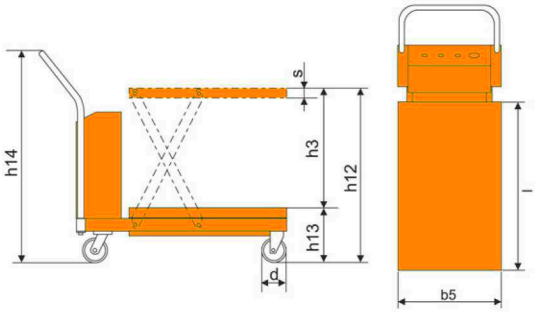

Stationary Lift Table

SHIGEMITSU
マティアリアル ハンドリング イクィプメンツ

Model: TP500

Full Electric Table Truck

1KG=2.205LB 1INCH=25.40MM

Model		TP500
Operate type		pedestrian
Capacity	Q(kg)	500
Max. lift height	h_{12}(mm)	900
Min. lift height	h_{13}(mm)	420
Lifting height	h_3(mm)	480
Table size	lxb$_5$xs(mm)	1030x600x52
Total height	h_{14}(mm)	1050
Tyre,front/rear		Φ127x2/Φ230x2
Total length	mm	1375
Travel speed, laden/unladen	km/h	4/4.5
Gradeability, laden/unladen	%	5/10
Battery voltage,nominal capacity k5	V/Ah	24/40

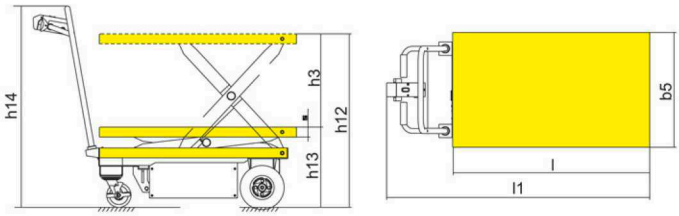

Model: LP1

Double hydraulic pump

Option of steel fence

1KG=2.205LB 1INCH=25.40MM

Model		LP1
Capacity	(kg)	2700
Max. lift height	h_{12}(mm)	1700
Min. height of table	h_{13}(mm)	220
Lifting height	h_3(mm)	1480
Table size	lxb5xs(mm)	2445x1830x195
Motor	(kw)	3.0
Voltage	(V)	220/380
Rise time	(s)	40
Lowering speed	(mm/s)	＜150
Sevice weight	(kg)	945

Dock Leveler

Model: LC

Electric hydraulic pump

1KG=2.205LB 1INCH=25.40MM

Model			LC	
Capacity		(kg)	6000	8000
Table size		(mm)	2500x2000	2500x2000
Lip board size		(mm)	2000x400	2000x400
Lifting height	Up	(mm)	400	400
	Down	(mm)	300	300
Exterior size (LxWxH)		(mm)	2640x2040x600	2640x2040x600
Motor		(Kw)	0.75	0.75
Voltage		(V)	220/380	220/380
Pithead size		(mm)	2580x2040x600	2580x2040x600
Service weight		(kg)	1110	1150

Remark: special size can be made according to customer's requirement.

Stationary Lift Table

SHIGEMITSU
マティアリアル ハンドリング イクィプメンツ

Model: ST01 ST03

Model: ST02 ST04

Model: STS20

- Designed for industrial heavy duty applications (as part of a production process, for machine feeding or stacking etc.)
- Double acting hydraulic cylinders.
- Lifting limit switch.
- Alum. table frame protects workers from injury by cutting off power.

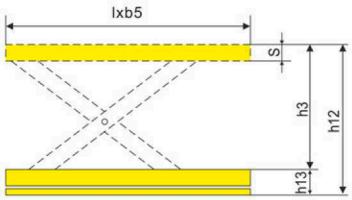

1KG=2.205LB 1INCH=25.40MM

MODEL		ST01	ST02	ST03	ST04	STS20		
Capacity	(kg)	1000	2000	1000	2000	2000	2000	2000
Max. lift height	h_{12}(mm)	1000	1000	1000	1000	2000	3500	4000
Min. height of table	h_{13}(mm)	190	230	190	230	425	500	500
Lifting height	h_3(mm)	810	820	810	820	1580	3000	3500
Table size	lxb5xs(mm)	1350x800x80	1350x800x130	1500x1000x80	1500x1000x130	1500x1400x130	2240x1590x180	2500x2000x180
Motor power	(kw)	0.75	0.75	0.75	0.75	1.5	3	4
Input voltage	(V)	220/380	220/380	220/380	220/380	220/380	220/380	220/380
Rise time	(s)	19	38	19	38	60	80	90
Lowering speed	(mm/s)	<150	<150	<150	<150	<150	<150	<150
Service weight	(kg)	206	248	216	268	520	1250	1550

Tow Tractor

SHIGEMITSU
マティアリアル ハンドリング イクィプメンツ

Model: TCD25P

Special for textile factory

Optional platform

Regenerative braking reduce the attrition.

1KG=2.205LB 1INCH=25.40MM

Model		TCD25P
Drive type		battery
Operate type		pedestrian
Load capacity	**Kg**	**2500**
Max. rated tractive force	N	750
Tyre size, front	mm	250x70
Tyre size, rear	mm	98x82
Wheels,number front rear (x=driven wheels)		1X+2/2
Height of tiller in drive position min./max	h1(mm)	495/1185
Overall length	l1(mm)	1532
Overall width	b3(mm)	775
Overall height	h2(mm)	833
Drawbar pull min/max height	h3(mm)	217/327
Turning radius	Wa(mm)	1515
Minimum turning diameter	d(mm)	632
Travel speed, laden/ unladen	Km/h	4.5/5
Battery voltage/nominal capacity	V/Ah	24/165
Battery weight	kg	175
Service weight (with battery)	kg	580

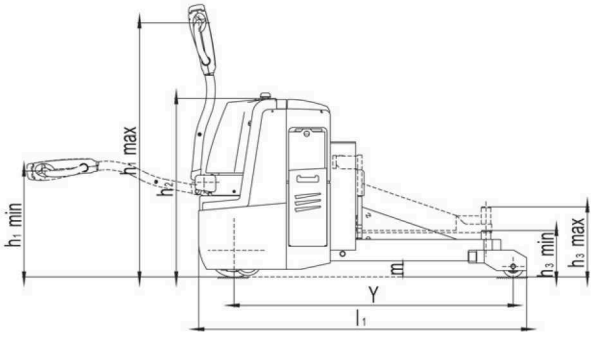

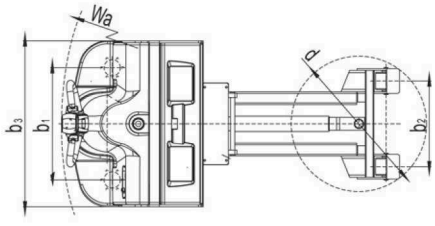

All specifications and figures are subject to change without notice for improvement.

PT. INDOTARA PERSADA

Sales Headquarter :
Graha Kencana Building Lt. 10 Suite 10F
Jl. Raya Perjuangan No. 88 - Kebon Jeruk, Jakarta Barat 11530

Tel : 021 - 583 55 398
Fax : 021 - 583 55 400

www.**indotara**.co.id

sales@indotara.co.id

Factory Address :
Graha Indotara - Millenium Industrial Estate, Jl. Millenium 22 Blok R3 No. 1, Cikupa 15710, Kab. Tangerang - Banten